NOARK

Catalog

Power Circuit Breakers and Non-Automatic Switches

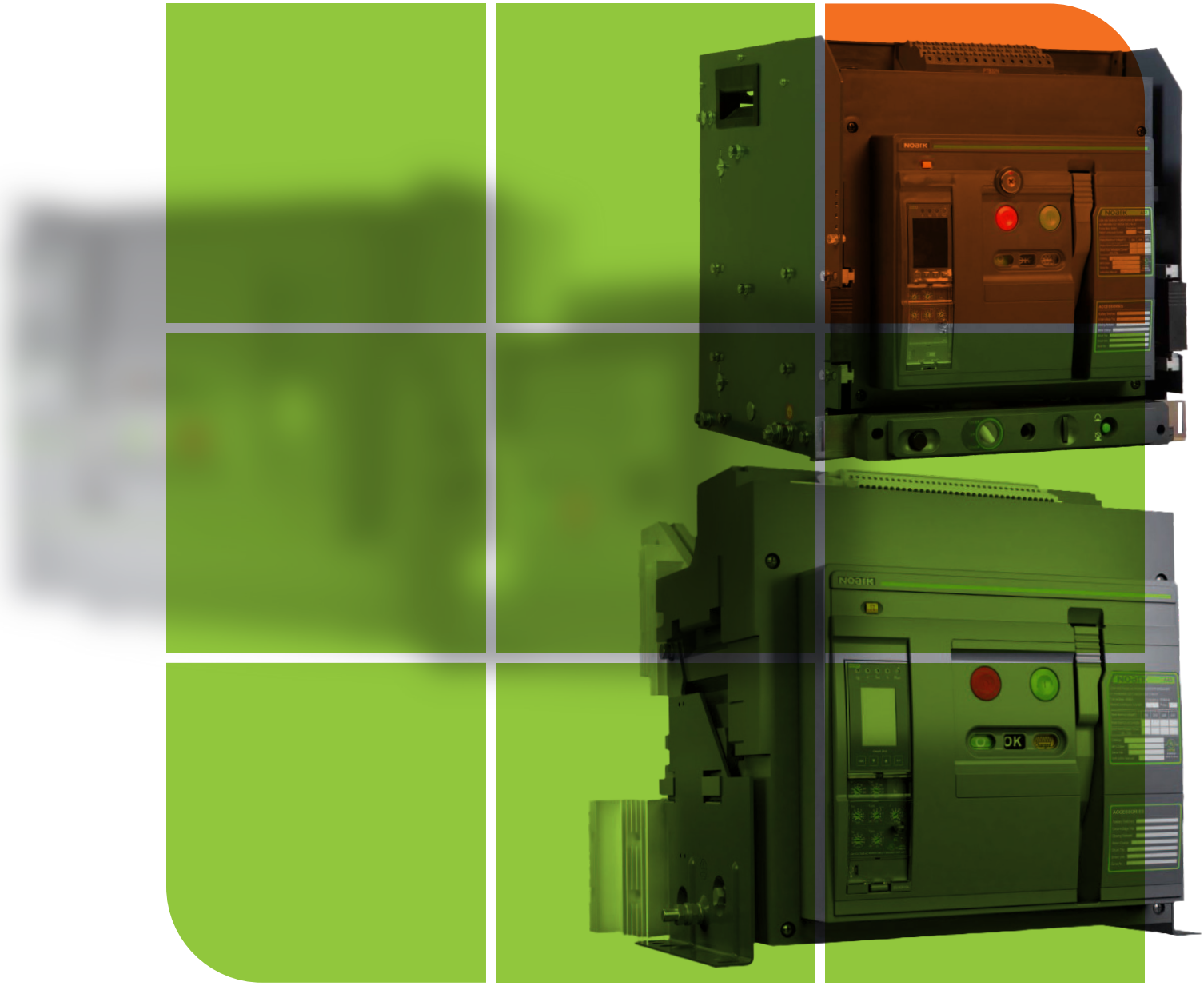

Excellent Products. Exceptional Value.

na.noark-electric.com

NOARK

ABOUT US

NOARK Electric is a global manufacturer of low-voltage electrical components for industrial applications. We specialize in motor controls and circuit protection for original equipment manufacturers. Our mission is to provide customers with the highest quality products at an exceptional value and back them with world-class service and support. Every NOARK product is tested and certified to the highest industry standards and covered by our exclusive five-year limited warranty.

Research and Development

The entire portfolio of high-quality NOARK products is designed for manufacturing and assembly (DFMA). Each component is developed in-house by our engineering team to meet the strictest standards and performance requirements. This dedication to excellence has led to the development of patented technology found in many of our products.

World-class Manufacturing

After being thoroughly tested, approved and certified – each NOARK product is sent into production at our state-of-the-art manufacturing facilities. This allows us to maintain strict quality control standards throughout the manufacturing process. In addition, NOARK Electric adheres to a policy of environmental protection and sustainability.

North American Distribution

NOARK's distribution centers are located in Pomona, CA and Kitchener, ON, with the aim of ensuring prompt and reliable deliveries of the entire product range to our customers all over North America. Our supply chain team works closely with our factories and logistics partners to ensure the availability of our products on the North American market and provide logistics services on the level which our customers expect. NOARK Electric is a subsidiary of the largest electrical manufacturing group in Asia with over 50 thousand employees and sales revenue of $22 billion USD. We have corporate facilities in Los Angeles, Shanghai and Prague to service the requirements of individual markets and countries.

140+	300+	20	22	3	10,000,000+	50,000+
Countries	Overseas Distributors	Overseas Subsidiaries	Logistics Centers	R & D Centers	Sq.Ft. Manufacturing Space	Employees Worldwide

TABLE OF CONTENTS

A. A25 Series Power Circuit Breakers

Item Name 04

B. A32 Series Power Circuit Breakers

Overview 34
Product Label 35
Product Selection Guide 36
Products 37
Technical Specifications 39
Environmental Conditions 40
Dimensions 41

C. A40 Series Power Circuit Breakers

Overview 51
Product Label 52
Product Selection Guide 53
Products 54
Technical Specifications 55
Environmental Conditions 56
Dimensions 57

D. A25 Series Trip Unit

Item Name 09

E. A32/A40 Series Trip Unit

Overview 58
Product Label 59
Product Selection Guide 61
Technical Specifications 62
Trip Curves 66

F. A25 Series Power Circuit Breakers Accessorie

Item Name 18

G. A32/A40 Series Power Circuit Breakers Accessories

Electrical 67
Mechanical 72

H. Appendix

Appendix I: PCB Selection Guide 74

A25 Series Power Circuit Breakers

Product Overview

NOARK Electric is proud to offer its A25 family of Power Circuit Breakers, Non-Automatic Disconnect Switches, and accessories. Our A25 products are optimized for OEMs and are manufactured under world-class quality systems in our ISO accredited factories. Like all NOARK products, these breakers are designed to deliver high quality, superior performance, and outstanding value.

A25 Power Circuit Breakers are available up to 2500 amps and are capable of IC ratings up to 85kA at 847 Volts. UL Listed and CSA Certified, the A25 family of products provide design standardization for OEM's no matter where they do business. A25 breakers offer a broad range of available trip units, accessories, and communications options. They are the ideal OEM solution for low voltage switchgear and customized power distribution assemblies used in Data Centers, Standby Power, Industrial, Healthcare and Commercial applications.

Ratings

- 00A through 2500A
- IC ratings up to 85kA at 847V
- Short-Time Withstand, 85kA at 847V
- 50 or 60 HZ operation
- 3 Pole and 4 Pole designs
- 10,000 Operations, before maintenance(Mechanical)
- 6000 Operations, before maintenance (Electrical)
- Meets ANSI C37.13, C37.16, C37.17 and C37.50
- 100% rated for continuous operation at maximum current rating.

Protection & Control Options

- LI, LSI, or LSIG Protection
- Standard LED display
- Color LCD display available
- Optional multi-metering trip unit with total harmonic distortion analysis and waveform capture
- Stored energy operating mechanism
- AC and DC rated motor operator,shunt trip and undervoltage release accessories
- Arc Flash Reduction Maintenance Mode
- Zone Selective Interlocking
- RS-485 Modbus Communication available

Approvals

- UL 1066, Low-Voltage AC and DC Power Circuit Breakers
- CSA C22.2 No. 31
- ANSI C37.13 Low Voltage Power Circuit Breakers
- ANSI C37.16 Low Voltage Power Circuit Breakers Ratings, Related Requirements and Applications
- ANSI C37.17 – IEEE Standard for Trip Systems
- ANSI C37.50 – Low Voltage AC Power Circuit Breakers,Test Procedure

Design Features

- UL/CSA field-installable accessories
- Rear horizontal or vertical connections
- Through-the-door design
- 3 Pole and 4 Pole designs
- OEM optimized Cassette
- Phase barriers (optional)
- Available as Disconnect Switch (ASD25)

© 2024 NOARK Electric

A25/ASD25 Product Selection Guide

A	25	H	3	F	H	800
NOARK UL 1066 Power Circuit Breakers	Protection Type	Interrupting/Short time withstanding Rating[3]	Poles	Mounting Type	Terminal Connection	Rated Current
A: Circuit Breaker	25: 2500A	Q	3: 3 Poles	F: Fixed	H: Horizontal	600: 600A
ASD: Non-Auto Switch		R	4: 4 Poles	D: Drawout[3]	V: Vertical	800: 800A
		H				1200: 1200A
						1600: 1600A
						2000: 2000A
						2500: 2500A[4]

Cassette Product Selection Guide

CAS11	N	3	H	1600
Cassette	Device Category	Poles	Terminal Connection	Rated Current
CAS11	N: UL	3: 3 Poles	H: Horizontal[1]	1200: 600A, 800A, 1200A
		4: 4 Poles	V: Vertical	2000: 1600A, 2000A

1. Horizontal terminal connection only available up to 2000A frame.
2. 2500A Frame is only available in in fixed type mounting.
3. Interrupting/Short time withstanding ratings vary depending on voltage. Refer to specifications on page 6 for ratings.
4. 2500A only available with fixed frame & vertical terminal connectors only.

© 2024 NOARK Electric

A25 Series Power Circuit Breakers

A25/ASD25 Products

Product Family	Number of Poles	Frame Type	Connection Type	Rated Current (A)	Q Interrupting 65kA @ 600 Vac		R Interrupting 85kA @ 600 Vac		H Interrupting 100kA @ 600 Vac	
					Catalog Number	Part Number	Catalog Number	Part Number	Catalog Number	Part Number
A25 Breaker	3	Fixed	Horizontal	600	A25Q3FH600	1800577	A25R3FH600	1800619	A25H3FH600	1800661
				800	A25Q3FH800	1800578	A25R3FH800	1800620	A25H3FH800	1800662
				1200	A25Q3FH1200	1800579	A25R3FH1200	1800621	A25H3FH1200	1800663
				1600	A25Q3FH1600	1800580	A25R3FH1600	1800622	A25H3FH1600	1800664
				2000	A25Q3FH2000	1800581	A25R3FH2000	1800623	A25H3FH2000	1800665
				2500	A25Q3FH2500	-	A25R3FH2500	-	A25H3FH2500	
			Vertical	600	A25Q3FV600	1800582	A25R3FV600	1800624	A25H3FV600	1800666
				800	A25Q3FV800	1800583	A25R3FV800	1800625	A25H3FV800	1800667
				1200	A25Q3FV1200	1800584	A25R3FV1200	1800626	A25H3FV1200	1800668
				1600	A25Q3FV1600	1800585	A25R3FV1600	1800627	A25H3FV1600	1800669
				2000	A25Q3FV2000	1800586	A25R3FV2000	1800628	A25H3FV2000	1800670
				2500	A25Q3FV2500	1800587	A25R3FV2500	1800629	A25H3FV2500	1800671
		Drrawout	Horizontal	600	A25Q3DH600	1800599	A25R3DH600	1800641	A25H3DH600	1800683
				800	A25Q3DH800	1800600	A25R3DH800	1800642	A25H3DH800	1800684
				1200	A25Q3DH1200	1800601	A25R3DH1200	1800643	A25H3DH1200	1800685
				1600	A25Q3DH1600	1800602	A25R3DH1600	1800644	A25H3DH1600	1800686
				2000	A25Q3DH2000	1800603	A25R3DH2000	1800645	A25H3DH2000	1800687
				2500	A25Q3DH2500	-	A25R3DH2500	-	A25H3DH2500	-
			Vertical	600	A25Q3DV600	1800604	A25R3DV600	1800646	A25H3DV600	1800688
				800	A25Q3DV800	1800605	A25R3DV800	1800647	A25H3DV800	1800689
				1200	A25Q3DV1200	1800606	A25R3DV1200	1800648	A25H3DV1200	1800690
				1600	A25Q3DV1600	1800607	A25R3DV1600	1800649	A25H3DV1600	1800691
				2000	A25Q3DV2000	1800608	A25R3DV2000	1800650	A25H3DV2000	1800692
				2500	A25Q3DV2500	-	A25R3DV2500	-	A25H3DV2500	-
ASD25 Disconnect Switch	4	Fixed	Horizontal	600	A25Q4FH600	1800588	A25R4FH600	1800630	A25H4FH600	1800672
				800	A25Q4FH800	1800589	A25R4FH800	1800631	A25H4FH800	1800673
				1200	A25Q4FH1200	1800595	A25R4FH1200	1800632	A25H4FH1200	1800674
				1600	A25Q4FH1600	1800596	A25R4FH1600	1800633	A25H4FH1600	1800675
				2000	A25Q4FH2000	1800597	A25R4FH2000	1800634	A25H4FH2000	1800676
				2500	A25Q4FH2500	1800598	A25R4FH2500	-	A25H4FH2500	-
			Vertical	600	A25Q4FV600	1800593	A25R4FV600	1800635	A25H4FV600	1800677
				800	A25Q4FV800	1800594	A25R4FV800	1800636	A25H4FV800	1800678
				1200	A25Q4FV1200	1800595	A25R4FV1200	1800637	A25H4FV1200	1800679
				1600	A25Q4FV1600	1800596	A25R4FV1600	1800638	A25H4FV1600	1800680
				2000	A25Q4FV2000	1800597	A25R4FV2000	1800639	A25H4FV2000	1800681
				2500	A25Q4FV2500	1800598	A25R4FV2500	1800640	A25H4FV2500	1800682
			Horizontal	600	A25Q4DH600	1800609	A25R4DH600	1800651	A25H4DH600	1800693
				800	A25Q4DH800	1800610	A25R4DH800	1800652	A25H4DH800	1800694
				1200	A25Q4DH1200	1800611	A25R4DH1200	1800653	A25H4DH1200	1800695
				1600	A25Q4DH1600	1800612	A25R4DH1600	1800654	A25H4DH1600	1800696
				2000	A25Q4DH2000	1800613	A25R4DH2000	1800655	A25H4DH2000	1800697
				2500	A25Q4DH2500	-	A25R4DH2500	-	A25H4DH2500	-
			Vertical	600	A25Q4DV600	1800614	A25R4DV600	1800656	A25H4DV600	1800698
				800	A25Q4DV800	1800615	A25R4DV800	1800657	A25H4DV800	1800699
				1200	A25Q4DV1200	1800616	A25R4DV1200	1800658	A25H4DV1200	1800700
				1600	A25Q4DV1600	1800617	A25R4DV1600	1800659	A25H4DV1600	1800701
				2000	A25Q4DV2000	1800618	A25R4DV2000	1800660	A25H4DV2000	1800702
				2500	A25Q4DV2500	-	A25R4DV2500	-	A25H4DV2500	-

© 2024 NOARK Electric

A25 / ASD25 Cassettes

Electrical Accessories

Product Family	Number of Poles	Frame Type	Connection Type	Rated Current (A)	Catalog Number	Part Number
A32 Drawout Cassette	3	Drawout	Horizontal	600	CAS11N3H1200	1800837
				800		
				1200		
				1600	CAS11N3H2000	1800838
				2000		
			Vertical	600	CAS11N3V1200	1800839
				800		
				1200		
				1600	CAS11N3V2000	1800840
				2000		
	4	Drawout	Horizontal	600	CAS11N4H1200	1800841
				800		
				1200		
				1600	CAS11N4H2000	1800842
				2000		
			Vertical	600	CAS11N4V1200	1800843
				800		
				1200		
				1600	CAS11N4V2000	1800844
				2000		

Note: Drawout Frame Selection includes the Cassette. Renewal part only.

© 2024 NOARK Electric

A25 Series Power Circuit Breakers

Ratings

A25 Series Power Circuit Breakers			A25Q	A25R	A25H
Poles			3 Poles | 4 Poles		
Mounting Type			Fixed | Drawout		
Rated current (A)		Fixed	600 | 800 | 1200 | 1600 | 2000 | 2500		
		Drawout	600 | 800 | 1200 | 1600 | 2000		
Rated Maximum Voltage Vac			254 | 508 | 635 | 847		
Frequency (Hz)			50 | 60		
Interrupting rating at rated maximum voltage (kA)		254 Vac	65	85	100
		508 Vac	65	85	100
		635 Vac	65	75	85
		847 Vac	65	75	85
Short time withstand current (kA)		254 Vac	65	75	85
		508 Vac	65	75	85
		635 Vac	65	75	85
		847 Vac	65	75	85
Operating time (ms)		Open	≤30		
		Close	≤70		
Life cycle (time)	Mechanical	Without maintenance	10000		
	Electrical	Without maintenance 635V	600		
	Electrical	Without maintenance 847V	300		

A25 Series Power Circuit Breakers			ASD25Q	ASD25R	ASD25H
Poles			3 Poles | 4 Poles		
Mounting Type			Fixed | Drawout		
Rated current (A)		Fixed	600 | 800 | 1200 | 1600 | 2000 | 2500		
		Drawout	600 | 800 | 1200 | 1600 | 2000		
Rated Maximum Voltage Vac			254 | 508 | 635 | 847		
Frequency (Hz)			50 | 60		
Short time withstand current (kA)		254 Vac	65	75	85
		508 Vac	65	75	85
		635 Vac	65	75	85
		847 Vac	65	75	85
Operating time (ms)		Open	≤30		
		Close	≤70		
Life cycle (time)	Mechanical	Without maintenance	10000		
	Electrical	Without maintenance 635 Vac	600		
	Electrical	Without maintenance 847 Vac	300		

Overall Dimensions			Height	Width	Depth
H×W×D (in/mm)	Drawout	3 Poles	18.11 (460)	14.06 (357)	16.93 (430)
		4 Poles	18.113 (460)	17.80 (452)	16.93 (430)
	Fixed	3 Poles	14.49 (368)	12.52 (318)	12.05 (306)
		4 Poles	14.49 (368)	16.26 (413)	12.05 (306)
Enclosure dimensions H×W×D (in/mm)	Drawout	3 Poles	20.87 (530) Ventilation Area Top:0mm² Bottom:0mm²	17.72 (450)	18.31 (465)
		4 Poles	20.87 (530) Ventilation Area Top:0mm² Bottom:0mm²	21.46 (545)	18.31 (465)

Weight lb (kg)		Fixed	Drawout
Power Circuit Breakers - A25	3 Poles 600A~1200A	104(47)	194(88)
	3 Poles 1600A~2000A	106(48)	200(91)
	3 Poles 2500A	119(54)	/
Non-Automatic Switches - ASD25	3 Poles 600A~1200A	97(44)	187(85)
	3 Poles 1600A~2000A	101(46)	194(88)
	3 Poles 2500A	112(51)	/

© 2024 NOARK Electric

A25 Series Power Circuit Breakers

Trip Unit Overview

A25 Trip Units offer the advanced electronic protection and control functionality required for power distribution and feeder protection in today's increasingly complex power systems. The A25 trip unit's purpose-built electronic circuits and microprocessors measure the breaker's electrical values against pre-set or user- selected parameters for overload, short circuit, current unbalance, over/under voltage, and over/under frequency. When required, a residual ground current transformer provides sensing for ground fault protection.

In addition to the standard LS, LSI and LSIG circuit protection functions, A25 trip units can offer advanced Digital Metering, Arc Flash Reduction Mode and Zone Selective Interlocking. Communications capability is available, ensuring that the trip unit's metered values and status can be transmitted to any required monitoring or control networks.

A25 Trip Units consist of three models, each providing different levels of control, display, diagnostics, and communications options, meeting the requirements of a wide range of end-use applications. Each model can be ordered in one of three protection configurations.

Models:

- Model M – LED display
- Model A – Color LCD display with a 3-phaseammeter
- Model H – Color LCD display with multi-meteringand total harmonic distortion waveform capture

Protection Configurations:

- LI: Long Time-delay Overload, InstantaneousShort Circuit.
- LSI: Long Time-delay Overload, Short Time-delayShort Circuit, Instantaneous Short Circuit
- LSIG: Long Time-delay Overload, Short Time- delay Short Circuit, Instantaneous Short Circuit,Equipment Ground Fault

Features:

- Microprocessor based true rms sensing
- Discrete rotary trip setting dials
- Cause of trip LEDs
- Unit status LED
- Making / breaking protection (MCR)
- Ready-To-Close Indicator
- Available zone selective interlocking
- Available arc flash reduction mode
- Available RS-485 communications
- USB port for power & communication
- Service short circuit protection (HSISC)

© 2024 NOARK Electric

A25 Series Power Circuit Breakers

Trip Unit Product Selection Guide

A25 Trip Unit Protection Features			
Type	Protection & Coordination	Setting	Setting Range
Series 2.0 (LI)	Long Delay (L)	Pickup	0.4 to 1.0 x In
		Time	2.0s to 30.0s
	Instantaneous (I)	Pickup	2.0 to 15.0 x @6Ir
Series 3.0 (LSI)	Long Delay (L)	Pickup	0.4 to 1.0 x In
		Time	2.0s to 30.0s
	Short Delay (S)	Pickup	1.5 to 10.0 x @6Ir
		Time	0.1s to 0.4s
			I^2t or Definite Time
	Instantaneous (I)	Pickup	2.0 to 15.0 x In
Series 3.0 (LSI)	Long Delay (L)	Pickup	0.4 to 1.0 x In
		Time	2.0s to 30.0s
	Short Delay (S)	Pickup	1.5 to 10.0 x @6Ir
		Time	0.1s to 0.4s
			I^2t or Definite Time
	Instantaneous (I)	Pickup	2.0 to 15.0 x In
Series 4.0 (LSIG)	Long Delay (L)	Long Delay Pickup	0.4 to 1.0 x In
		Long Delay Time	2.0s to 30.0s
	Short Delay (S)	Short Delay Pickup	1.5 to 10.0 x @6Ir
		Short Delay Time	0.1s to 0.4s
			I^2t or Definite Time
	Instantaneous (I)	Instantaneous Pickup	2.0 to 15.0 x In
	Ground Fault (G)	Ground Fault Pickup	500A to 1200A
		Ground Fault Time	0.1s to 0.4s
			I^2t or Definite Time

A25 Trip Unit Models Display Options									
Model	LED Trip Indicator	LCD Display	Alarm Indication	Phase Current Display	Arc Flash Maintenance Mode	Advanced Protection	Advanced Metering	Zone Selective Interlocking	RS485 Communications (Modbus)
M	Y	N	N	N	Y	N	N	N	N
A	Y	Y	Y	Y	Y	N	N	N	N
H	Y	Y	Y	Y	Y	Y	Y	Y	Y

Trip Unit Product Selection Guide

SU	30	NH	A	11	F	Rating plug Catalog #
Trip Unit	Protection Type	Model	Control Voltage		Mounting Type	IN12N06
SU	20: LI	NM: LED Display	A: 24VDC		F: Fixed	IN12N08
	30: LSI	NA: LCD Display & Ammeter	C: 100-130VAC		D: Drawout	IN12N12
	40: LSIG	NH: LCD Display & Harmonics Metering	D: 200-240VAC			IN12N16

© 2024 NOARK Electric

A25 Series Power Circuit Breakers

Trip Unit Controls and Indicators Overview

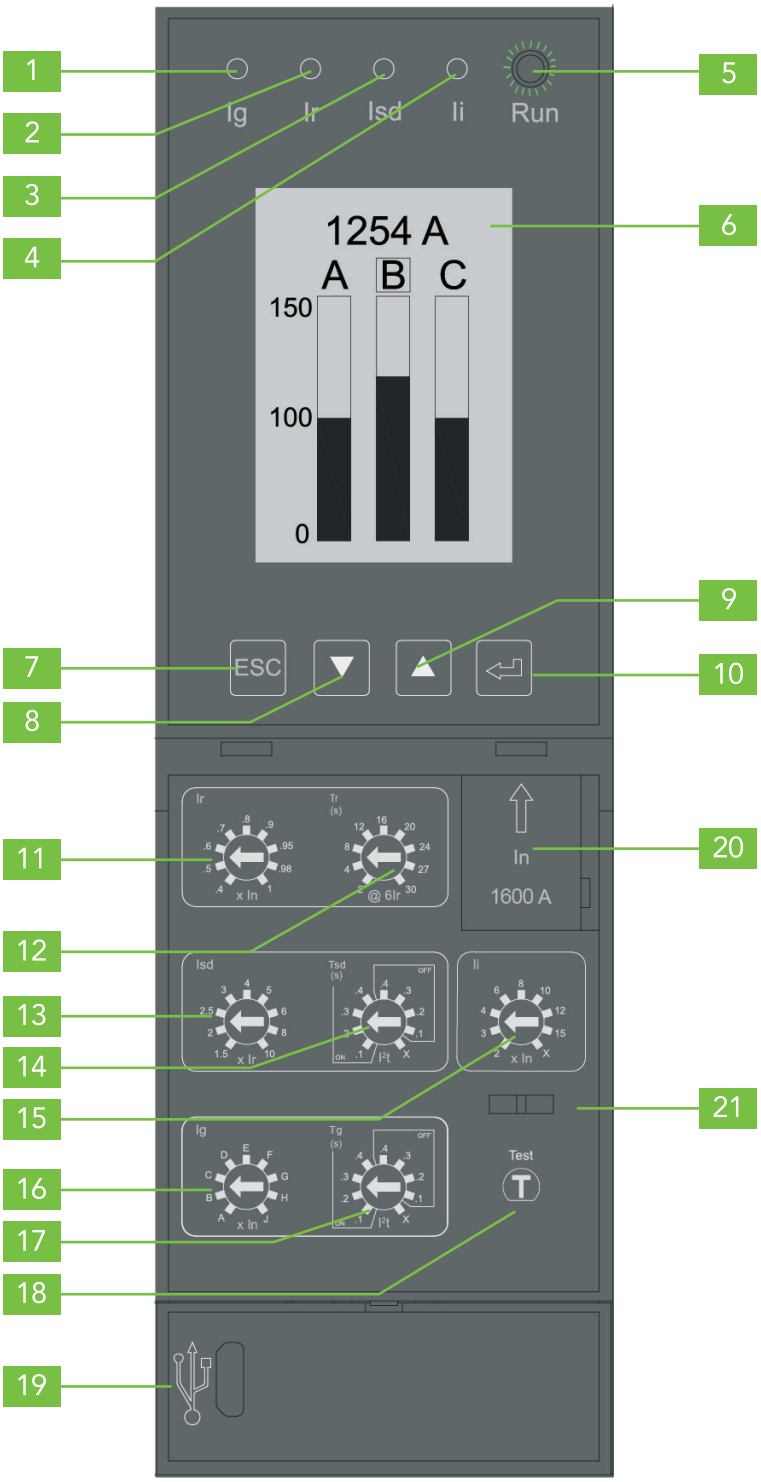

Indicators

1	LED cause of trip indicator (Ig)
2	LED cause of trip indicator (Ir)
3	LED cause of trip indicator (Isd)
4	LED cause of trip indicator (Ii)
5	Running LED indicator
6	Model A and Model H:
	Color LCD display with status indicator
	Green = Normal
	Yellow = Alarm
	Red = Trip
	Model M: Digital LED display

Display Controls

7	Escape button ESC
8	Down selection button
9	Up selection button
10	Enter button

Trip Setting Interface

11	Long time delay current setting (Ir)
12	Long time delay trip time setting (tr)
13	Short time delay current setting (Isd)
14	Short time delay trip time setting (tsd)
15	Instantaneous current setting (Ii)
16	Ground fault current setting (Ig)
17	Ground fault trip time setting (Tg)
18	Trip test button
20	Rating Plug
19	USB port
21	Transparent cover lock hook

© 2024 NOARK Electric

A25 Series Power Circuit Breakers

Trip Unit Selection Guide

Functions	Model M	Model A	Model H
Protection functions			
Long time	•	•	•
Overload pre-alarm	•	•	•
Short time	•	•	•
Instantaneous	•	•	•
Neutral (4-Pole only)	•	•	•
Ground-fault	•	•	•
Current unbalance	•	•	•
Voltage unbalance			•
Overvoltage protection			•
Undervoltage protection			•
Over-frequency			•
Under-frequency			•
Phase sequence			•
Reverse active power			•
Demand value			•
Total Harmonics Distortion			•
Thermal memory	•	•	•
Measurement functions			
Current	•	•	•
Voltage			•
Frequency			•
Power			•
Power factor			•
Ammeter and kilowatt hours			•
Average Demand			•
Total Harmonics Distortion			•
Maintenance function			
Trip records	•	•	•
Alarm records	•	•	•
Operations records	•	•	•
Contact wear records		•	•
Load monitoring			•
Zone Selective Interlocking			•
Arc reduction	•	•	•
Test Button	•	•	•
Other functions			
RS485 communication function			•
Digital input/output DI/DO			•
Real time clock		•	•
LED display	•		
Color LCD Display		•	•

© 2024 NOARK Electric

A25 Series Power Circuit Breakers

Trip Unit Settings

Protection Functions and Settings										
Long Delay protection (L)										
Ir - Long Delay Pickup dial setting (multiples of In)		0.40	0.50	0.60	0.70	0.80	0.90	1.0	Tolerance = ±10%	
Tr - Long Delay Time dial setting (s)		2	4	8	12	16	20	24	27	30
Long Delay Trip Times (s)	t @1.2 x Ir	< 1h								
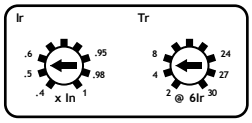	t @2.0 x Ir	18	36	72	108	114	180	216	243	270
	t @6.0 x Ir	2	4	8	12	16	20	24	27	30
	Long time delay inverse time characteristics, $t = \frac{(6Ir)^2}{i^2} \times Tr$									

In = Rating plug value, Tr = Long time delay time, Ir = Long time delay current, i = Short circuit current Tolerance = ±40ms or ±10% whichever is greater

Short Delay protection (S)										
Isd - Short Delay Pickup dial setting (multiples of In)	1.5	2	2.5	3	4	5	6	8	10	Tolerance = ±10%
Tsd - Short Delay Time dial setting (s)	I^2t ON				I^2t OFF				X	Tolerance = ±40ms or ±10% whichever is greater
	0.1	0.2	0.3	0.4	0.4	0.3	0.2	0.1		
Short Delay Trip Times	Dial Range		Current Value			Trip Time(s)				
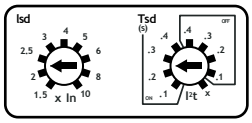	I^2t OFF		< 0.9 x Isd			No Trip				
			> 1.1 x Isd			0.4	0.3	0.2	0.1	
	I^2t ON		< 0.9 x Isd			No Trip				
			≥1.1 x Isd to ≥10 x Ir			Inverse Time				
			>10 x Ir			0.1	0.2	0.3	0.4	
X						Short Delay protection OFF				

© 2024 NOARK Electric

A25 Series Power Circuit Breakers

Trip Unit Selection Guide

Protection Functions and Settings

Ground Fault protection (G)

Ig – Ground Fault Pickup dial setting

Dial Position	A	B	C	D	E	F	G	H	J	
400A <In and ≤1200A	0.2	0.3	0.4	0.5	0.6	0.7	0.8	0.9	1.0	Tolerance = ±10%
In > 1200	500A	640A	720A	800A	880A	960A	1040A	1120A	1200A	

Tg – Ground Fault Delay Time dial setting(s)	I^2t ON					I^2t OFF			X	Tolerance = ±40ms or ±10% whichever is greater
	0.1	0.2	0.3	0.4	0.4	.03	0.2	0.1		

Ground Fault Trip Times

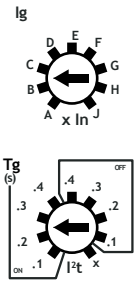

Dial Range	Ground Current Value	Trip Time (s)				
I^2t OFF(s)	<0.9 x Ig >1.1 x Ig	No Trip				In = Rating plug value Ig = Ground Fault Pickup Tg=Ground Fault Time Delay ig = Ground Current
		0.4	0.3	0.2	0.1	
I^2t ON (s)	<0.9 x Ig	No Trip				
	≥1.1x Ig or (ig<In and ig<1200A)	$t = \frac{(1.0In)^2 \times Tg}{ig^2}$ or $t = \frac{(1200)^2 \times Tg}{ig^2}$				
X	Ground Fault protection OFF					

Optional Settings – Model H Only

Function	Parameter	Min	Max	Step
Over Voltage	Pickup	100V	1200V	1V
	Pickup Delay	0.2s	60s	0.1s
	Drop Out	0.2In	Pickup	1V
	Drop Out Delay	0.2s	60s	0.1s
Under Voltage	Pickup	100V	1200V	1V
	Pickup Delay	0.2s	60s	0.1s
	Drop Out	Pickup	Pickup~1200V	1V
	Drop Out Delay	0.2s	60s	0.1s
Voltage Unbalance	Pickup	2%	30%	1%
	Pickup Delay	0.2s	60s	0.1s
	Drop Out	2%	Pickup	1%
	Drop Out Delay	0.2s	60s	0.1s
Current Unbalance	Pickup	5%	60%	1%
	Pickup Delay	0.1s	40s	0.1s
	Drop Out	5%	Pickup	1%
	Drop Out Delay	10s	200s	1s

© 2024 NOARK Electric

A25 Series Power Circuit Breakers

Trip Unit Settings

Optional Settings – Model H Only (continued)				
Function	Parameter	Min	Max	Step
Demand Unbalance	Pickup	0.2In	In	1A
	Pickup Delay	15s	1500s	1s
	Drop Out	0.2In	Pickup setting	1A
	Drop Out Delay	15s	3000s	1s
Total Harmonic Distortion (Current)	Pickup	8%	60%	0.5%
	Pickup Delay	1s	120s	1s
	Drop Out	8%	Pickup setting	0.5%
	Drop Out Delay	1s	120s	1s
Total Harmonic Distortion (Voltage)	Pickup	4%	10%	0.1%
	Pickup Delay	1s	120s	1s
	Drop Out	4%	Pickup setting	0.1%
	Drop Out Delay	1s	120s	1s
Load Shedding Method 1 (Control two branch loads independently)	Load 1 Pickup	0.2Ir	1.0Ir	1A
	Load 1 Pickup Delay	20%Tr	80%Tr	1%Tr
	Load 2 Pickup	0.2Ir	1.0Ir	1A
	Load 2 Pickup Delay	20%Tr	80%Tr	1%Tr
Load Shedding Method 2 (Control one branch load)	Pickup	0.2Ir	1.0Ir	1A
	Pickup Delay	20%Tr	80%Tr	1%Tr
	Drop Out	0.2Ir	Pickup setting	1A
	Drop Out Delay	10s	600s	1s
Under Frequency	Pickup	45Hz	65Hz	0.5Hz
	Pickup Delay	0.2s	5s	0.1s
	Drop Out	Start setting	65Hz	0.5Hz
	Drop Out Delay	0.2s	36s	0.1s
Over Frequency	Pickup	45Hz	65Hz	0.5Hz
	Pickup Delay	0.2s	5s	0.1s
	Drop Out	45Hz	65Hz	0.5Hz
	Drop Out Delay	0.2s	36s	0.1s
Reverse Active Power	Pickup	5KW	500KW	1V
	Pickup Delay	0.2s	20s	0.1s
	Drop Out	5KW	Pickup setting	1V
	Drop Out Delay	1s	36s	0.1s
Phase Sequence	Settings: ABC or ACB Instantaneous Trip			

© 2024 NOARK Electric

A25 Series Power Circuit Breakers

Trip Unit Settings

Optional Settings – Model H Only (continued)				
Function	Parameter	Min	Max	Step
Demand Unbalance	Pickup	0.2In	In	1A
	Pickup Delay	15s	1500s	1s
	Drop Out	0.2In	Pickup setting	1A
	Drop Out Delay	15s	3000s	1s
Total Harmonic Distortion (Current)	Pickup	8%	60%	0.5%
	Pickup Delay	1s	120s	1s
	Drop Out	8%	Pickup setting	0.5%
	Drop Out Delay	1s	120s	1s
Total Harmonic Distortion (Voltage)	Pickup	4%	10%	0.1%
	Pickup Delay	1s	120s	1s
	Drop Out	4%	Pickup setting	0.1%
	Drop Out Delay	1s	120s	1s
Load Shedding Method 1 (Control two branch loads independently)	Load 1 Pickup	0.2Ir	1.0Ir	1A
	Load 1 Pickup Delay	20%Tr	80%Tr	1%Tr
	Load 2 Pickup	0.2Ir	1.0Ir	1A
	Load 2 Pickup Delay	20%Tr	80%Tr	1%Tr
Load Shedding Method 2 (Control one branch load)	Pickup	0.2Ir	1.0Ir	1A
	Pickup Delay	20%Tr	80%Tr	1%Tr
	Drop Out	0.2Ir	Pickup setting	1A
	Drop Out Delay	10s	600s	1s
Under Frequency	Pickup	45Hz	65Hz	0.5Hz
	Pickup Delay	0.2s	5s	0.1s
	Drop Out	Start setting	65Hz	0.5Hz
	Drop Out Delay	0.2s	36s	0.1s
Over Frequency	Pickup	45Hz	65Hz	0.5Hz
	Pickup Delay	0.2s	5s	0.1s
	Drop Out	45Hz	65Hz	0.5Hz
	Drop Out Delay	0.2s	36s	0.1s
Reverse Active Power	Pickup	5KW	500KW	1V
	Pickup Delay	0.2s	20s	0.1s
	Drop Out	5KW	Pickup setting	1V
	Drop Out Delay	1s	36s	0.1s
Phase Sequence	Settings: ABC or ACB Instantaneous Trip			

© 2024 NOARK Electric

A25 Series Power Circuit Breakers

Trip Curves

Selective Protection LSI

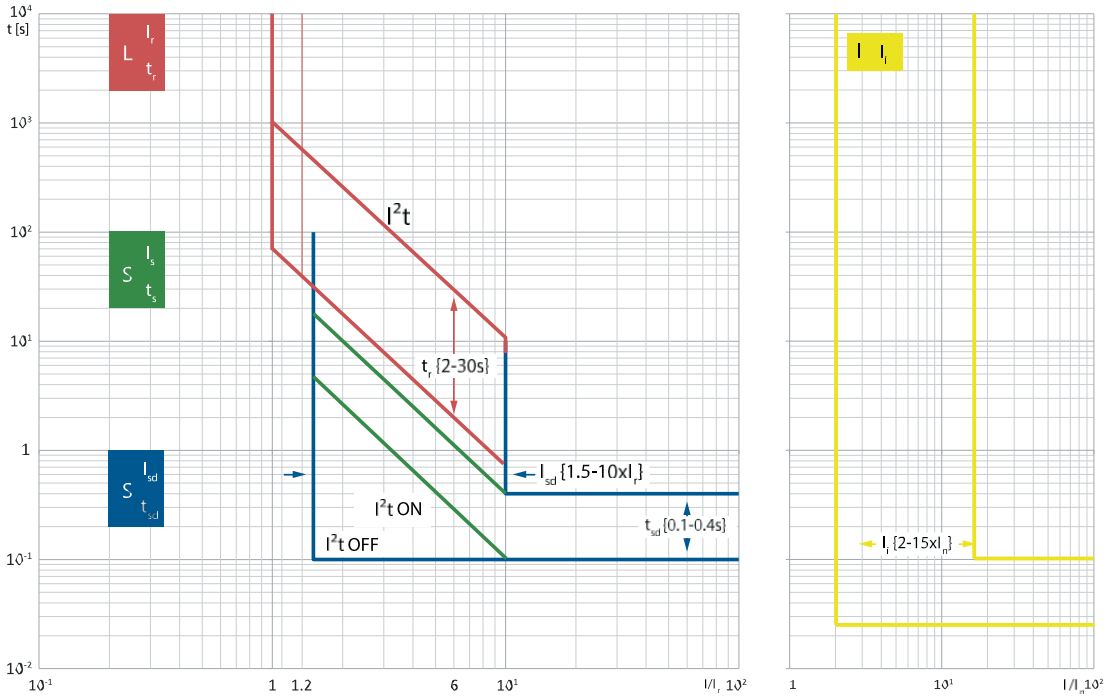

Ground protection curve

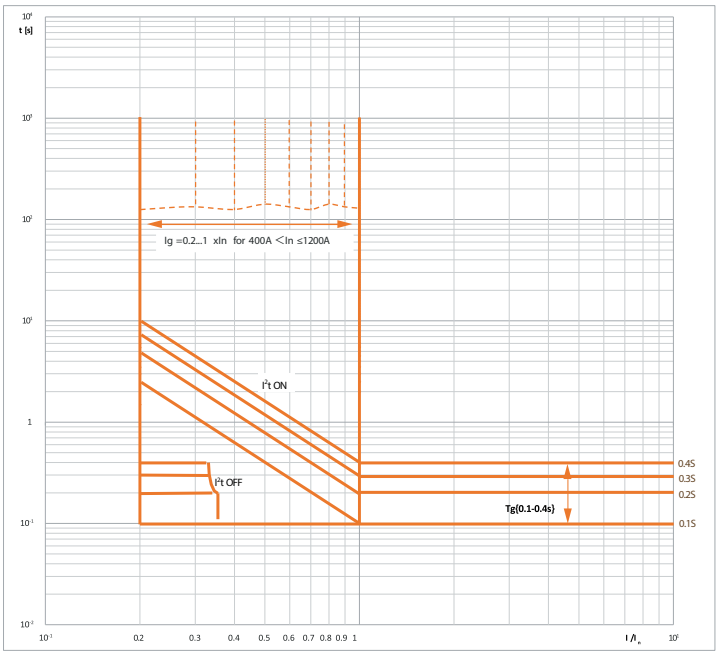

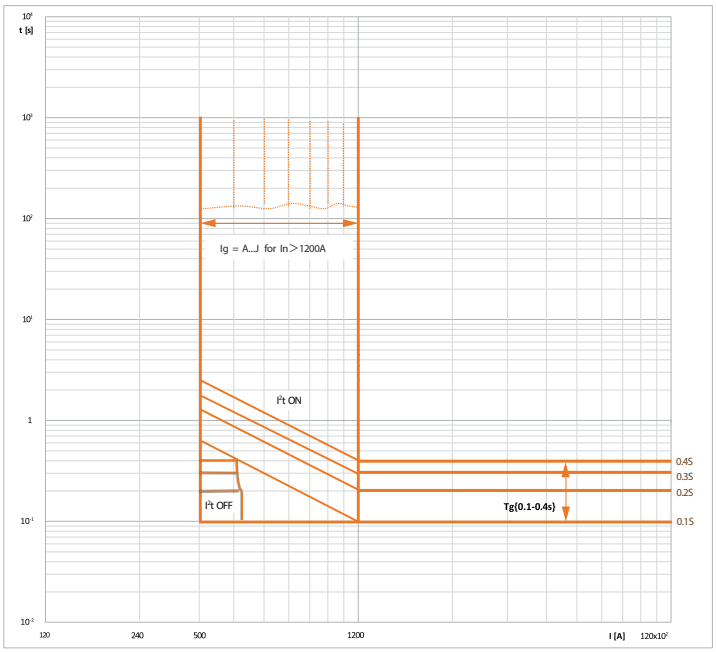

© 2024 NOARK Electric

A25 Series Power Circuit Breakers

Accessories Product Overview

An extensive range of accessories are available for the A25 power (air) circuit breakers. Each accessory can be installed as an independent unit, making thanks to the modular architecture of the A25. This makes installation and maintenance fast and simple. for technicians.

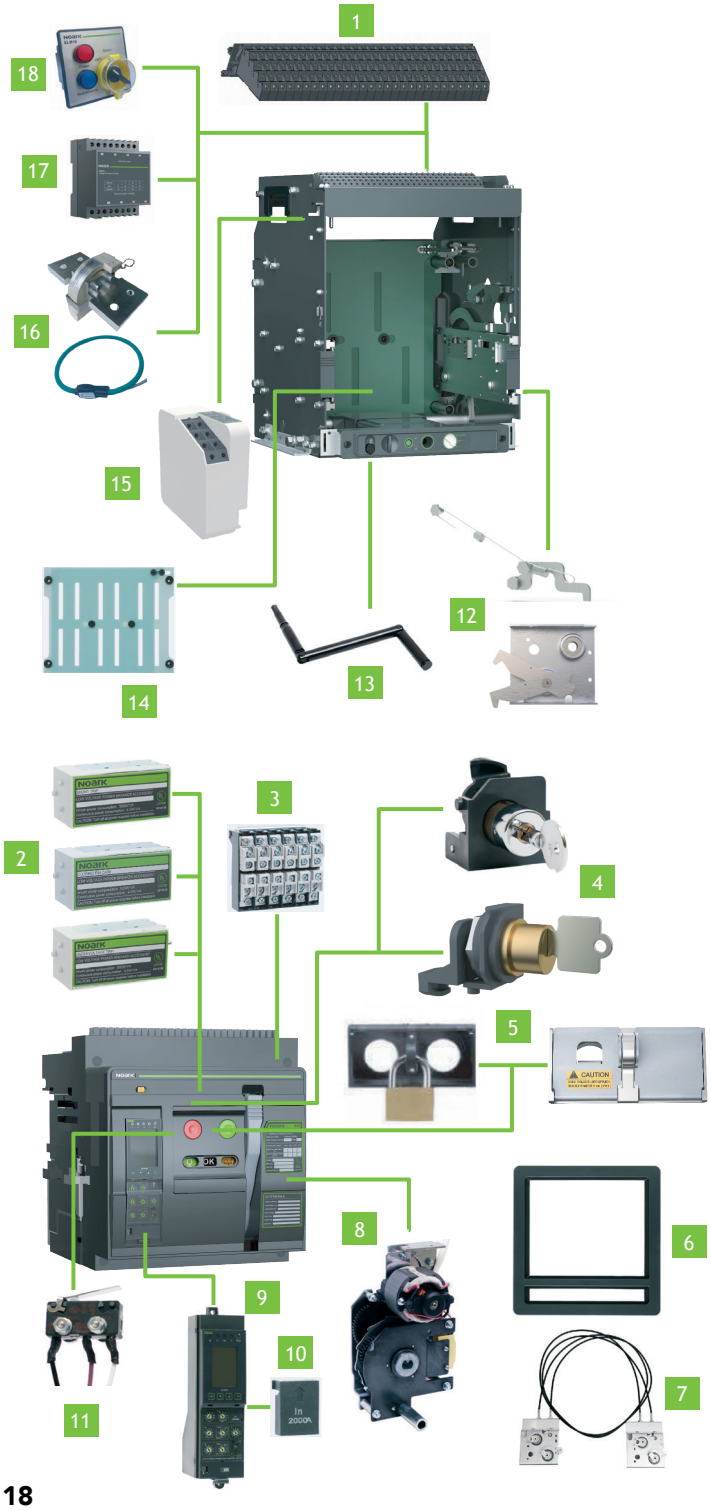

Indicators

1	Terminal Block: TBDN
2	Under Voltage Release: UVT series
	Shunt Trip Release: SHT series
	Closing Release: XF series
3	Auxiliary Contact: AX Series
4	OFF Position Key-Lock: KLK series
	Kirk Key Interlock Kit: KKC11N
5	Pushbutton Lock Device:
	VBP12N (Plastic) and VBP11NM (Metal)
6	Doorframes-CDP11N and DDP11N
7	Mechanical Interlocks With Cables-IPA series
8	Motor Operator Device: MD series
9	Trip Unit: SU series
10	Rating Plug: IN series
11	Ready To Close Contact: PF11N series
12	Door Interlocks: VPEC11NP and VPEC11NS
13	Rotary Handle
14	Safety shutter
15	Position Indicator: EF11N
16	External Current Transformer For Neutral:
	NCT11N&RCT-1800-COIL 11
17	Voltage Conversion Module: VCM10
18	Energy-Limiting Maintenance Switch: ELM10

© 2024 NOARK Electric

A25 Series Power Circuit Breakers

Electrical Accessories Selection Guide

Shunt Release

Opens the breaker instantaneously when the coil is energized by a voltage input.

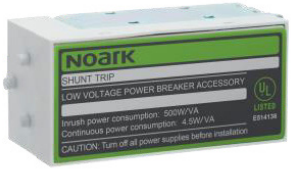

Shunt Trip Release			Field Installable		
Catalog Number	Part Number	Control Voltage	Inrush/Continuous Power Consumption (W or VA)	Operational Voltage Range (70-110%)	Operating time (ms)
SHT11NAF	1800983	24-30VDC	500 / 4.5	17~33Vdc	≤50ms
SHT11NBF	1800984	48-60VAC/DC	500 / 4.5	34~66Vac/dc	≤50ms
SHT11NCF	1800985	110-130VAC/DC	500 / 4.5	77~143Vac/dc	≤50ms
SHT11NDF	1800986	200-240VAC/DC	500 / 4.5	140~264Vac/dc	≤50ms
SHT11NEF	1800987	380-440VAC	500 / 4.5	266~484Vac	≤50ms
SHT11NAD	1800988	24-30VDC	500 / 4.5	17~33Vdc	≤50ms
SHT11NBD	1800989	48-60VAC/DC	500 / 4.5	34~66Vac/dc	≤50ms
SHT11NCD	1800990	110-130VAC/DC	500 / 4.5	77~143Vac/dc	≤50ms
SHT11NDD	1800991	200-240VAC/DC	500 / 4.5	140~264Vac/dc	≤50ms
SHT11NED	1800992	380-440VAC	500 / 4.5	266~484Vac	≤50ms

Closing Release

Remotely closes the circuit breaker when the coil is energized by a voltage input.

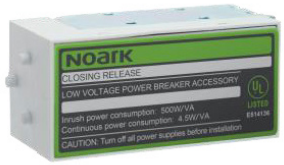

Shunt Trip Release			Field Installable		
Catalog Number	Part Number	Control Voltage	Inrush/Continuous Power Consumption (W or VA)	Operational Voltage Range (70-110%)	Operating time (ms)
XF11NAF	1800963	24-30VDC	500 / 4.5	17~33Vdc	≤50ms
XF11NBF	1800964	48-60VAC/DC	500 / 4.5	34~66Vac/dc	≤50ms
XF11NCF	1800965	110-130VAC/DC	500 / 4.5	77~143Vac/dc	50ms
XF11NDF	1800966	200-240VAC/DC	500 / 4.5	146~264Vac/dc	≤50ms
XF11NEF	1800967	380-440VAC	500 / 4.5	266~484Vac	≤50ms
XF11NAD	1800968	24-30VDC	500 / 4.5	17~33Vdc	≤50ms
XF11NBD	1800969	48-60VAC/DC	500 / 4.5	34~66Vac/dc	≤50ms
XF11NCD	1800970	110-130VAC/DC	500 / 4.5	77~143Vac/dc	≤50ms
XF11NDD	1800971	200-240VAC/DC	500 / 4.5	146~264Vac/dc	≤50ms
XF11NED	1800972	380-440VAC	500 / 4.5	266~484Vac	≤50ms

Undervoltage Release

Opens the breaker when the supply voltage falls to 30–60% of rated voltage. If the release is not energized to 85% of its supply voltage, the circuit breaker cannot be closed electrically or manually.

Shunt Trip Release			Field Installable			
Catalog Number	Part Number	Control Voltage	Inrush Continuous Power Consumption (W or VA)	Operational Voltage Range (85-110%)	Dropout Voltage (30-60%)	Operating time (ms)
UVT11NAF	1801003	24-30VDC	500 / 4.5	20~33Vdc	7–18 Vdc	≤70ms
UVT11NBF	1801004	48-60VAC/DC	500 / 4.5	41~66Vac/dc	14–36 Vdc	≤70ms
UVT11NCF	1801005	110-130VAC/DC	500 / 4.5	94~143Vac/dc3	33–78 Vac/Vdc	≤70ms
UVT11NDF	1801006	200-240VAC/DC	500 / 4.51	170~264Vac/dc	60–144 Vac/Vdc	≤70ms
UVT11NEF	1801007	380-440VAC	500 / 4.53	323~484Vac	114–264 Vac	≤70ms
UVT11NAD	1801008	24-30VDC	500 / 4.5	20~33Vdc	7–18 Vdc	≤70ms
UVT11NBD	1801009	48-60VAC/DC	500 / 4.5	41~66Vac/dc	14–36 Vdc	≤70ms
UVT11NCD	1801010	110-130VAC/DC	500 / 4.5	94~143Vac/dc	33–78 Vac/Vdc	≤70ms
UVT11NDD	1801011	200-240VAC/DC	500 / 4.5	170~264Vac/dc	60–144 Vac/Vdc	≤70ms
UVT11NED	1801012	380-440VAC	500 / 4.5	323~484Vac	114–264 Vac	≤70ms

© 2024 NOARK Electric

A25 Series Power Circuit Breakers

Electrical Accessories Selection Guide

Auxiliary Contact

Monitors ON/OFF status of the circuit breaker or non-automatic switch and provides contacts to electrically indicate its position remotely.

Contact configuration:
44: 4NO and 4NC; 66: 6NO and 6NC;
44C: 4 Form C; 66C: 6 Form C

Auxiliary Contact		Field Installable		
Frame Size	Breaker/Switch	Contacts	Catalog Number	Part Number
A25/ASD25	Fixed	4NO+4NC	AX11NF44	1801021
		6NO+6NC	AX11NF66	1801022
		4NO/NC	AX11NF44C	1801023
		6NO/NC	AX11NF66C	1801024
	Drawout	4NO+4NC	AX11ND44	1801025
		6NO+6NC	AX11ND66	1801026
		4NO/NC	AX11ND44C	1801027
		6NO/NC	AX11ND66C	1801028

Voltage (V)		Rated Current (A)
AC	240	5
	480	2
DC	110	0.25
	220	0.25

Position Indicator

Indicates the position of the breaker – connected, testing, disconnected. For drawout type devices only.
3 CO Form C contacts, one contact for each breaker position.

Connected to secondary terminals #58, 59, 60 (Connected), #61, 62, 63 (Test), #64, 65, 66 (Disconnected). Factory installed only. - in the scope of delivery there are additional secondary terminals #58-66.

Position Indicator – Field installable		
Frame Size	Catalog Number	Part Number
A25/ASD25	EF11N	1801030

© 2024 NOARK Electric

A25 Series Power Circuit Breakers

Electrical Accessories Selection Guide

Rear Terminal Connectors Rear Connection Plate

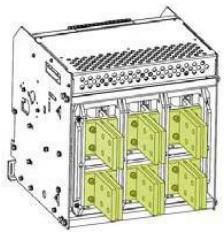

Rear Connection Plate				Field Installable	
Frame Size	Poles	Breaker/Switch	Rated Current	Catalog Number	Part Number
A25/ASD25	3P	Fixed type	600A/800A/1200A	RCP11N3F1200	1801065
		Fixed type	1600A/2000A	RCP11N3F2000	1801066
		Fixed type	2500A	RCP11N3F2500	1801067
		Drawout type	600A/800A/1200A	RCP11N3D1200	1801068
		Drawout type	1600A/2000A	RCP11N3D2000	1801069
	4P	Fixed type	600A/800A/1200A	RCP11N4F1200	1801070
		Fixed type	1600A/2000A	RCP11N4F2000	1801071
		Fixed type	2500A	RCP11N4F2500	1801072
		Drawout type	600A/800A/1200A	RCP11N4D1200	1801073
		Drawout type	1600A/2000A	RCP11N4D2000	1801074

Note: This item is included with every new A25 Breaker. Renewal part only.

Motor Operator

Charges the closing spring of mechanism when the circuit breaker is closed only. Mechanical charging handle can be used with or without power supply. Equipped with a limit switch contact signals that spring is charged.

Rear Connection Plate				Field Installable	
Catalog Number	Part Number	Control Voltage	Inrush/ Continuous Power Consumption (W or VA)	Operational Voltage Range (85-110%)	Charging time (s)
MD11NAF	1801041	24-30VDC	800 / 200	20-33Vdc	≤4s
MD11NBF	1801042	48-60VAC/DC	1200 / 200	41-66Vdc	≤4s
MD11NCF	1801043	110-130VAC/DC	1800 / 180	94-143Vac/dc	≤4s
MD11NDF	1801044	200-240VAC/DC	1800 / 180	170-264Vac/dc	≤4s
MD11NEF	1801045	380-440VAC	1800 / 180	323-484Vac	≤4s
MD11NAD	1801046	24-30VDC	800 / 200	20-33Vdc	≤4s
MD11NBD	1801047	48-60VAC/DC	1200 / 200	41-66Vdc	≤4s
MD11NCD	1801048	110-130VAC/DC	1800 / 180	94-143Vac/dc	≤4s
MD11NDD	1801049	200-240VAC/DC	1800 / 180	170-264Vac/dc	≤4s
MD11NED	1801050	380-440VAC	1800 / 180	323-484Vac	≤4s

Ready To Close Contact

This device is intended to be installed in A25 series power circuit breaker depending on customer's requirements.
It is used to indicate whether the operating mechanism can be closed.

Frame Size	Breaker/Switch	Catalog Number	Part Number
A25/ASD25	Fixed Type	PF11NF	1801053
	DrawoutType	PF11ND	1801054

© 2024 NOARK Electric

A25 Series Power Circuit Breakers

Electrical Accessories Selection Guide

OFF Position Keylock Operated Lock

For A25 Power circuit breaker and ASD25 Non-automatic switch. Blocks Locks the breaker in the OFF position to ensure the breaker can not be closed. One circuit breaker is provided with one lock and one key. Two circuit breakers are provided with two locks and one key. Three circuit breakers are provided with three locks and two keys.

Off Position Keylock – Field Installable			
Frame Size	**Configuration**	**Catalog Number**	**Part Number**
A25/ASD25	1 lock 1 key	KLK12N1	1800319
	2 locks 1 key	KLK12N2	1800320
	3 locks 2 keys	KLK12N3	1800321

External current transformer for Neutral

An external transformer for N-pole protection of three-pole circuit breakers in four-wire network, installed on the neutral conductor, the current transformer enables measurement and protection of the neutral conductor.

Position Indicator – Field installable		
Frame Size	**Catalog Number**	**Part Number**
A25/ASD25	NCT11N	1801078

Note: External neutral protection for three-pole breaker only.

Energy-limiting maintenance switch

ELM10 is used to mitigate arc hazards and protect personal safety during product maintenance. It should be used in coordination with Power Circuit Breakers with arc reduction. While the Energy limiting function can be set and turned on in all trip unit models (M, A & H), the ELM10 is programmable only with the Harmonic 'H' version trip unit and the applicable software should be 0.91 or higher.

Description	ELM10
Ambient temp (°C)	-20°C+70°C
Pollution class	Class 3
Installation category	II
Rated voltage Ue(V)	AC480V/DC24
Rated frequency (Hz)	50/60
Enclosure protection class	IP40
Electrical/mechanical endurance(times)	1500

Frame Size	Catalog Number	Part Number
A25/ASD25	ELM10	1800448

© 2024 NOARK Electric

A25 Series Power Circuit Breakers

Mechanical Accessories Selection Guide

Door Frame

IP40 Protection

IP40 Door Frame – Field Installable			
Frame Size	**Configuration**	**Catalog Number**	**Part Number**
A25/ASD25	Fixed	CDP11N	1800439
	Drawout	DDP11N	1801060

Note: This item is included with every new A25 Breaker. Renewal part only.

Pushbutton Locking Cover

Prevents access to the control push buttons of the breaker. Factory installed only. Lock is not included.

Pushbutton Locking Cover - Factory Installable			
Frame Size	**Catalog Number**	**Part Number**	**Material**
A25/ASD25	+VBP12N	1800314	Plastic
	+VBP11NM	1801055	Metal

Phase Barrier

Provides improved isolation between the terminal connectors on the back of the breaker or cassette. 3 Pole or 4 Pole kit.

Phase Barrier – Field Installable Only				
Frame Size	**Breaker/ Switch**	**Quantity**	**Catalog Number**	**Part Number**
A25/ASD25	Fixed	2 pcs for 3 poles	PHS12N2	1800334
	Fixed	3 pcs for 4 poles	PHS12N3	1800335
	Drawout	2 pcs for 3 poles	DPS12N2	1800336
	Drawout	3 pcs for 4 poles	DPS12N3	1800337

© 2024 NOARK Electric

A25 Series Power Circuit Breakers

Mechanical Accessories Selection Guide

Mechanical Interlocking With Cables

Cable-connected mechanical interlock mechanism that is used to prevent two interlocked breakers from closing at the same time. interlocking of 2 or 3 (in preparation) breakers. Cable length for Maximum distance between mounting positions of the interlocks is 78in(2m). Suitable for A25 Power circuit breaker and ASD25 Non-automatic switch 2 interlocks and 2 cables (2 breakers version), 3 interlocks and 6 cables (3 breakers version).

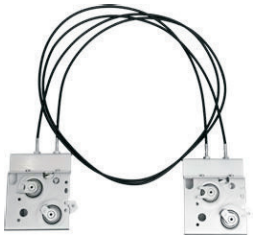

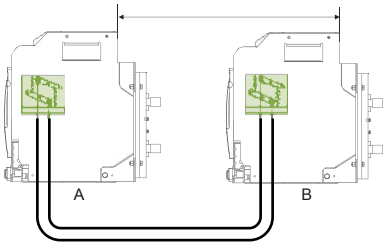

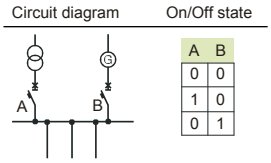

Mechanical Interlocks with Cables – Field installable		
Frame Size	**Catalog Number**	**Part Number**
A25/ASD25	IPA12N	1800339

Door Interlock

Ensures that the door or cover of distribution board the breaker compartment cannot be opened when the circuit breaker is closed or in its connected or test position.

Door Interlocks - Factory Installable			
Frame Size	**Interlock type**	**Catalog Number**	**Part Number**
A25/ASD25	Position interlock	+VPEC11NP	1801061
	Status interlock	+VPEC11NS	1801062

© 2024 NOARK Electric

A25 Series Power Circuit Breakers

Dimensions

Fixed type

A25-600/800A/1200A-3P
Horizontal connection

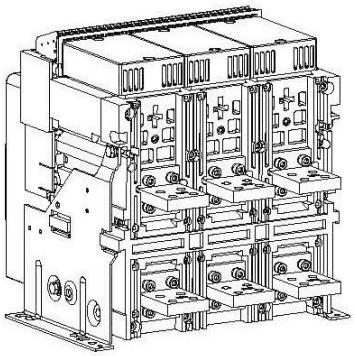

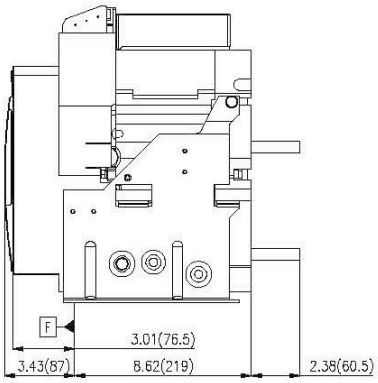

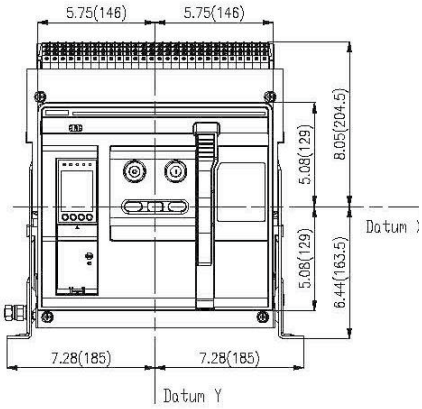

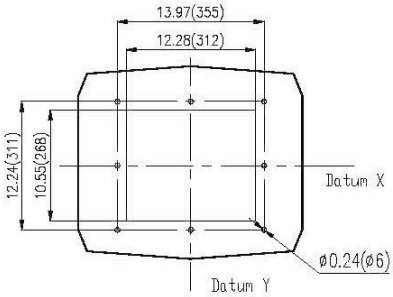

panel perforating size

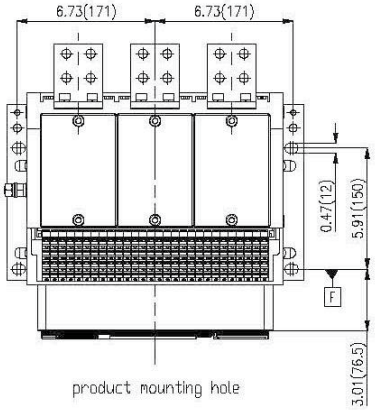

product mounting hole

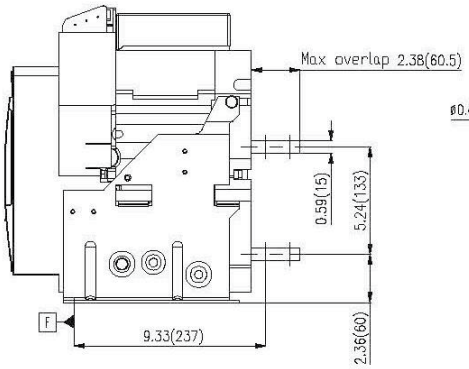

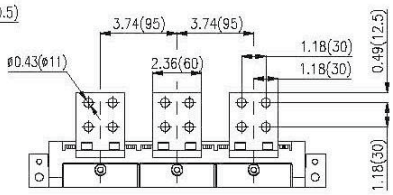

© 2024 NOARK Electric

A25/ASD25 A25 Series Power Circuit Breakers

Dimensions

Fixed type

A25-1600A/2000A-3P
Vertical connection

in (mm)

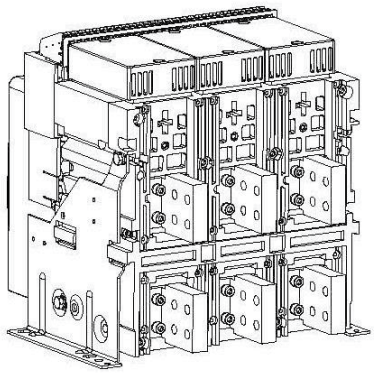

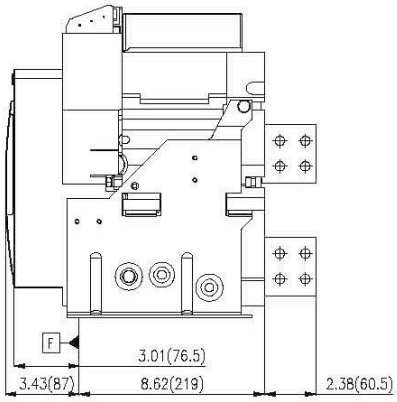

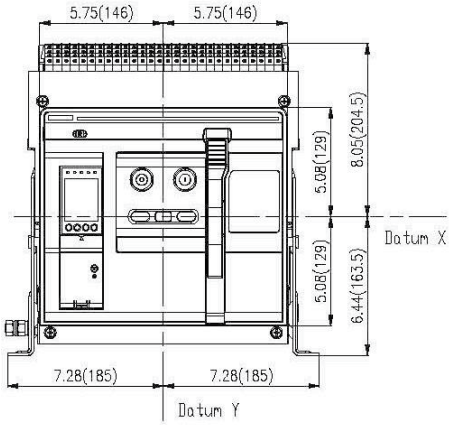

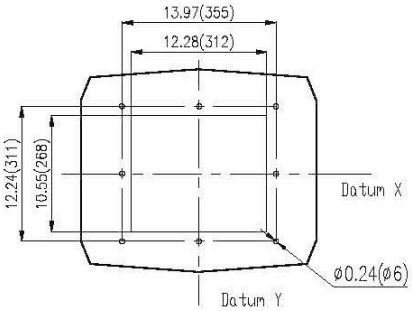

panel perforating size

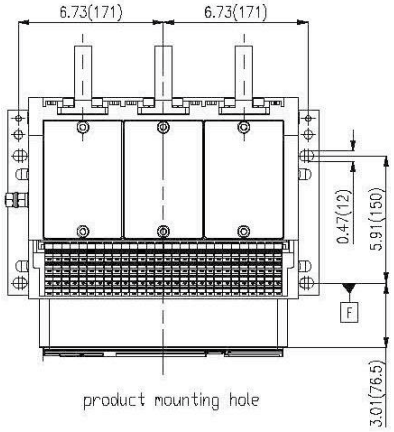

product mounting hole

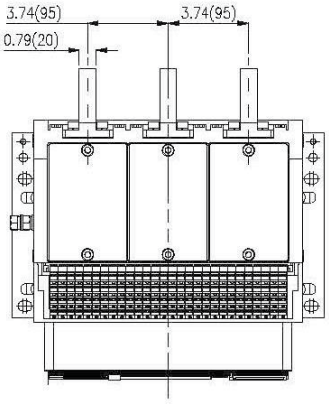

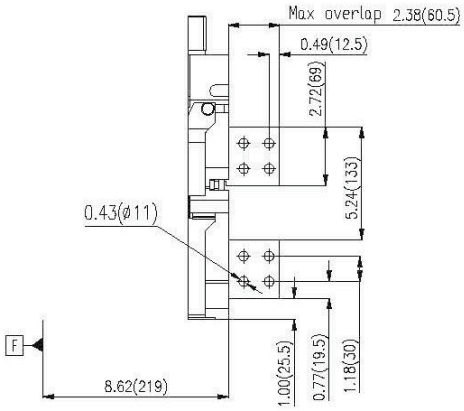

© 2024 NOARK Electric

A25/ASD25 A25 Series Power Circuit Breakers

Dimensions

Fixed type

A25-1600A/2000A-3P
Horizontal connection

in (mm)

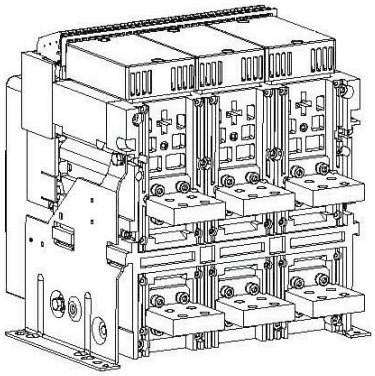

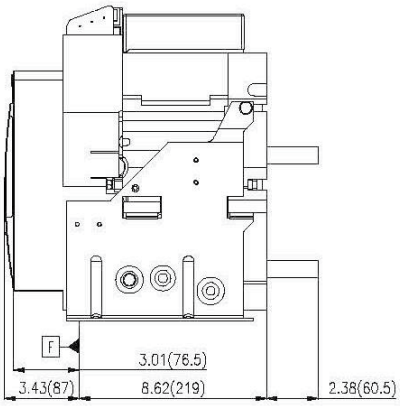

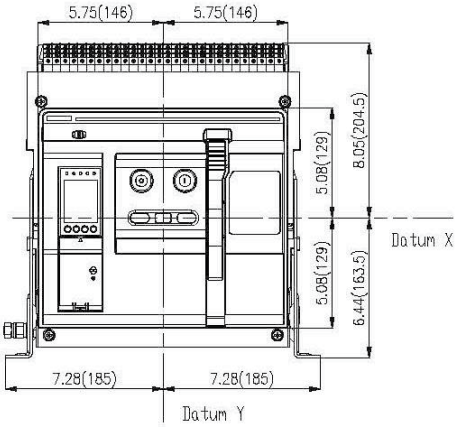

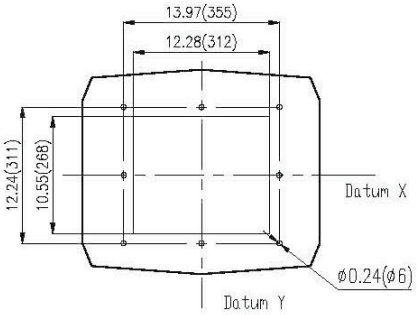

panel perforating size

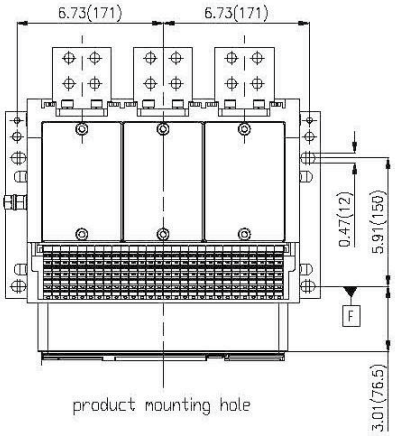

product mounting hole

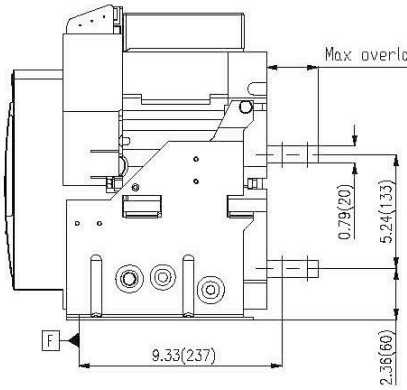

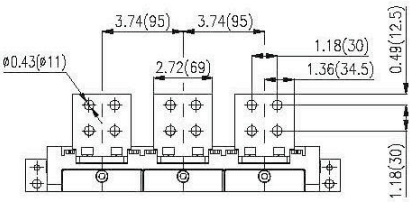

© 2024 NOARK Electric

A25/ASD25 A25 Series Power Circuit Breakers

Dimensions

Fixed type

A25-2500A-3P
Vertical connection

in (mm)

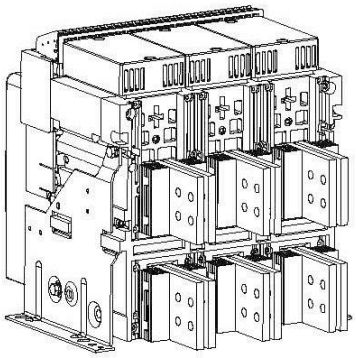

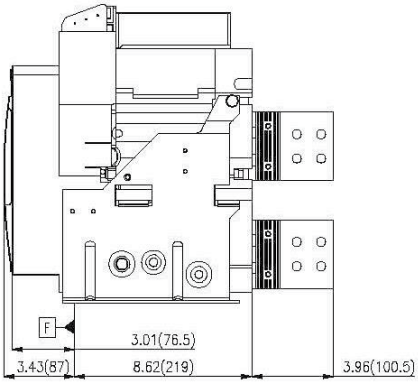

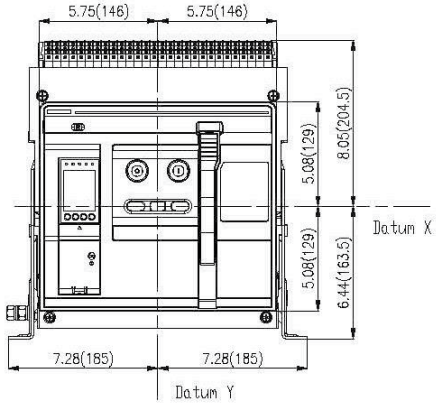

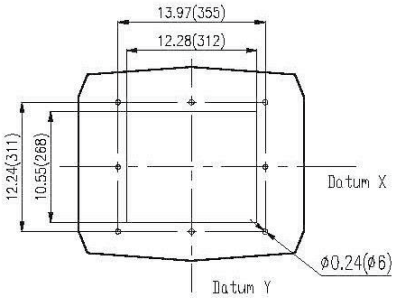

panel perforating size

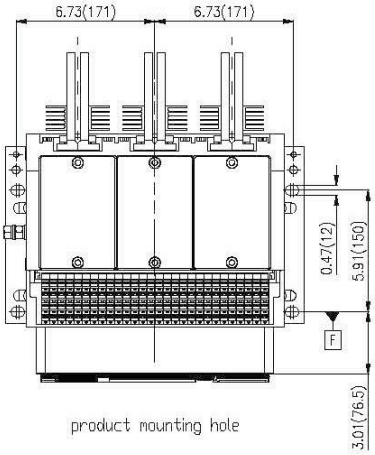

product mounting hole

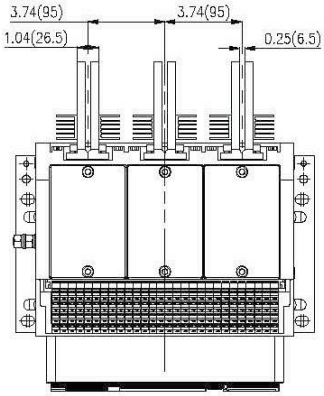

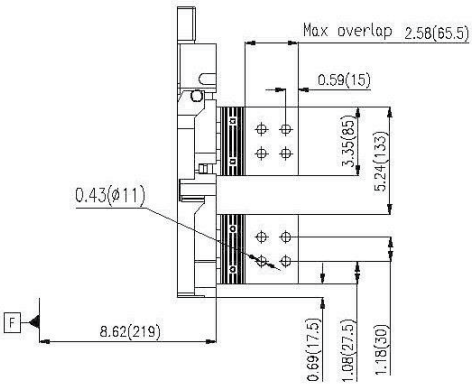

© 2024 NOARK Electric

A25/ASD25 A25 Series Power Circuit Breakers

Dimensions

Draw out type

A25-600/800/1200A-3P
Vertical connection

in (mm)

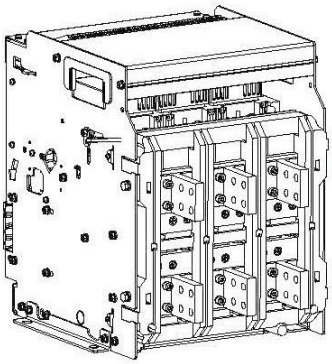

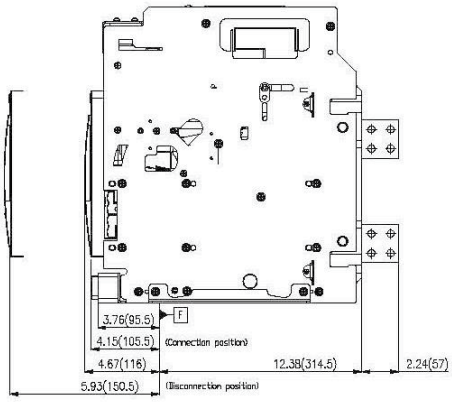

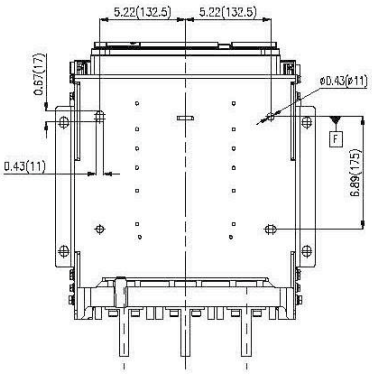

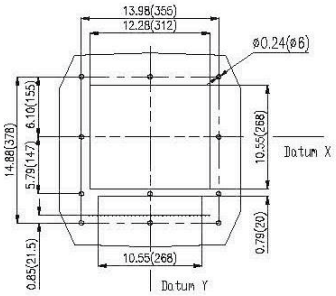

panel perforating size

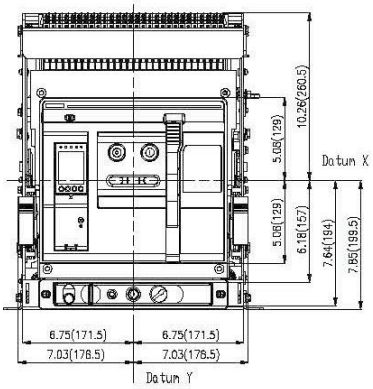

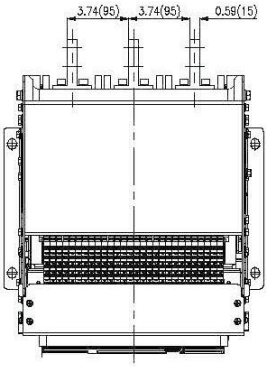

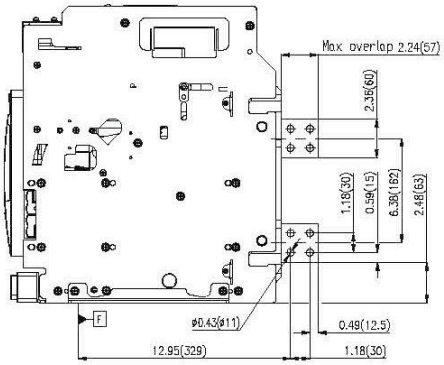

© 2024 NOARK Electric

A25/ASD25 A25 Series Power Circuit Breakers

Dimensions

Draw out type

A25-600/800/1200A-3P
Horizontal connection

in (mm)

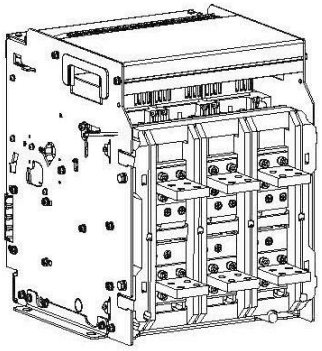

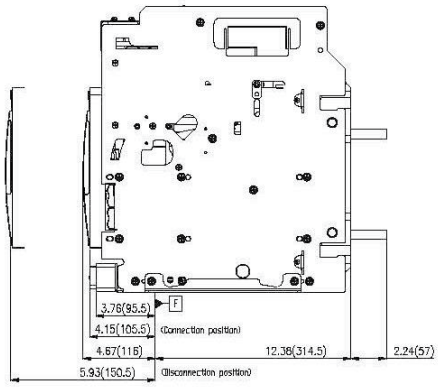

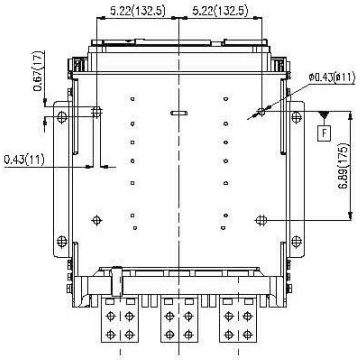

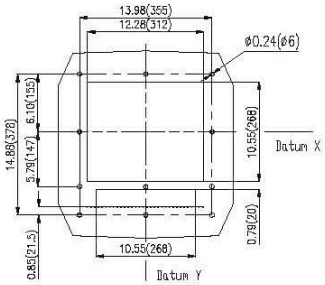

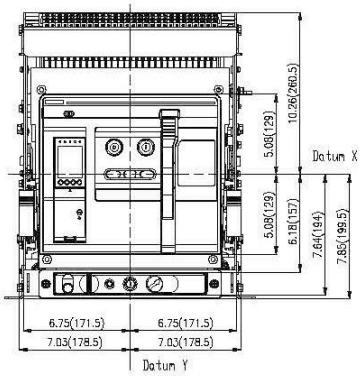

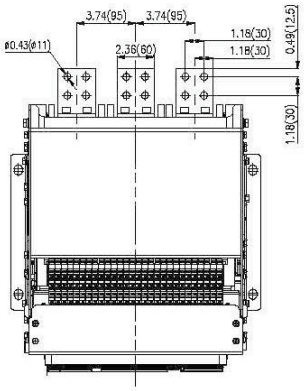

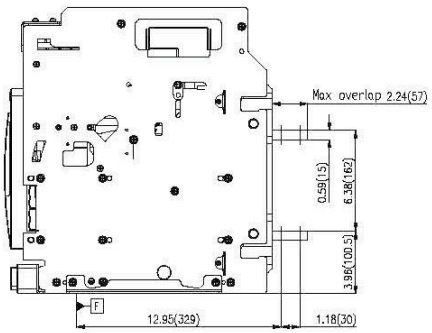

© 2024 NOARK Electric

A25/ASD25 A25 Series Power Circuit Breakers

Dimensions

Draw out type

A25-1600/2000A-3P
Vertical connection

in (mm)

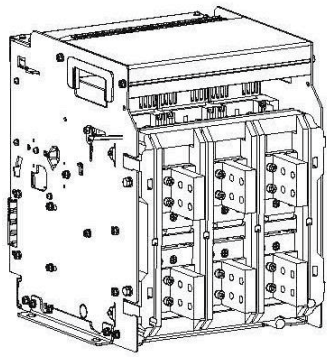

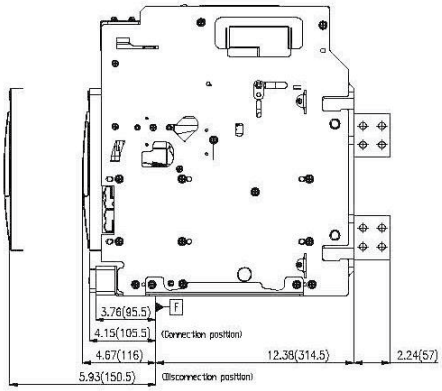

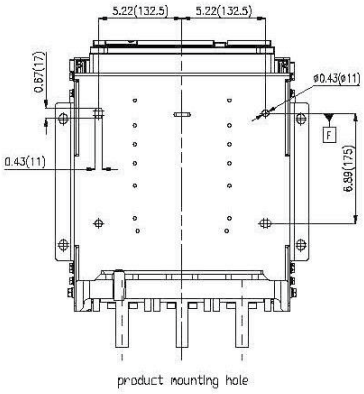

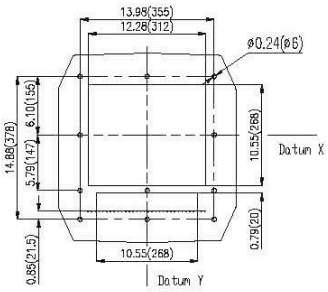

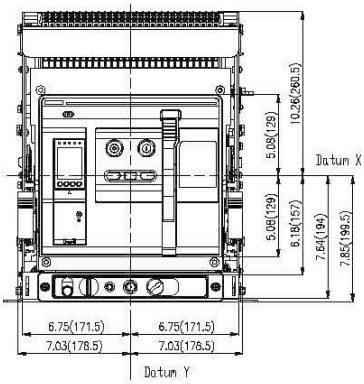

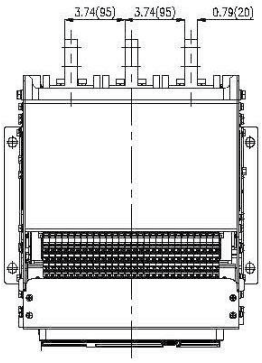

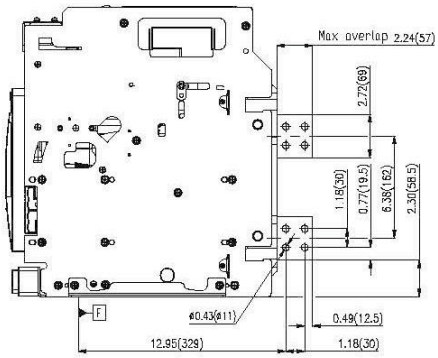

© 2024 NOARK Electric

A25/ASD25 A25 Series Power Circuit Breakers

Dimensions

Draw out type

A25-1600/2000A-3P
Horizontal connection

in (mm)

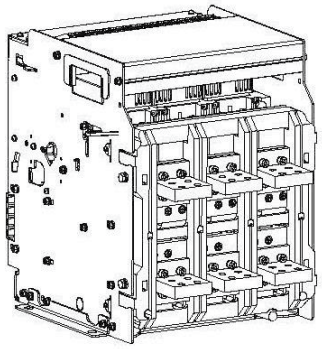

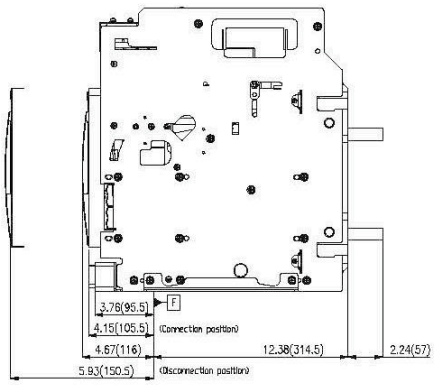

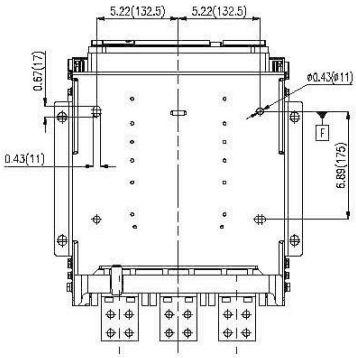

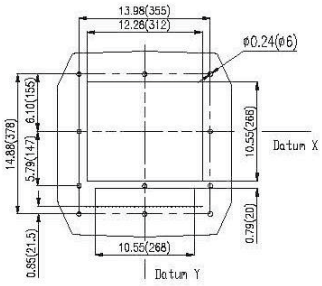

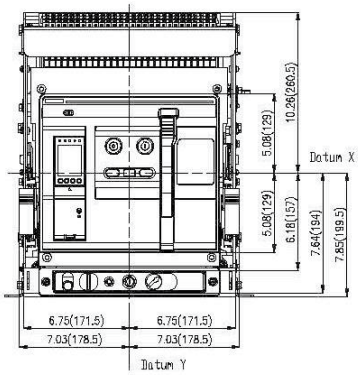

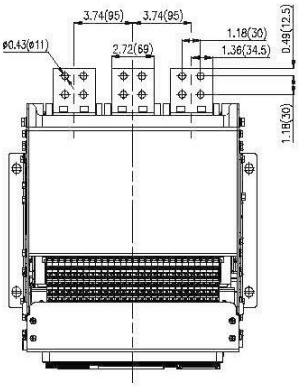

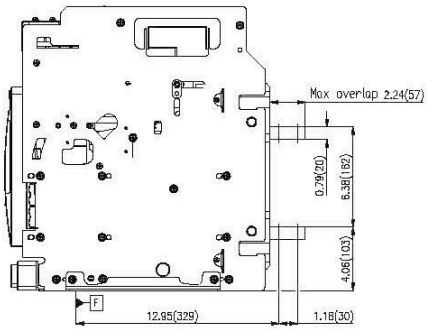

© 2024 NOARK Electric

A25/ASD25 A25 Series Power Circuit Breakers

Dimensions

Draw out type

A25-600/800/1200A-3P
Vertical connection

in (mm)

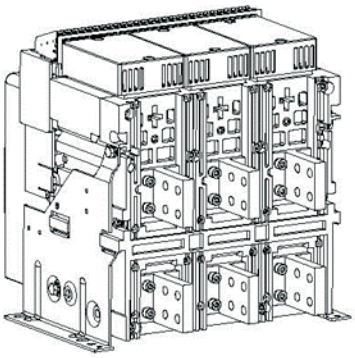

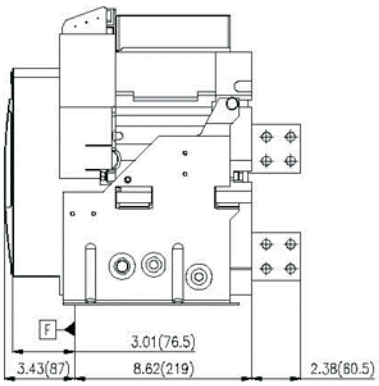

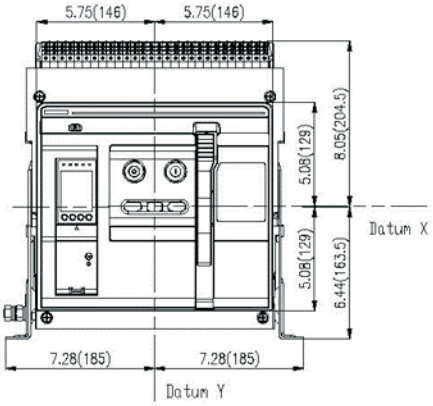

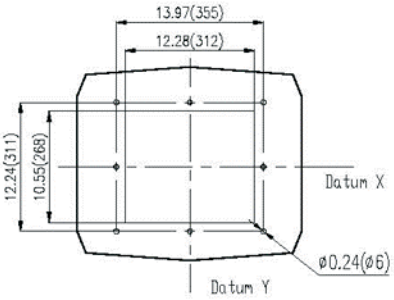

panel perforating size

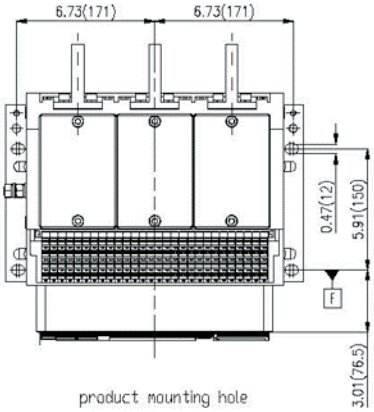

product mounting hole

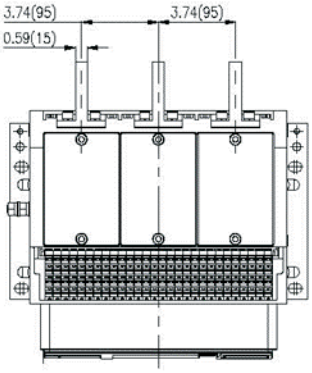

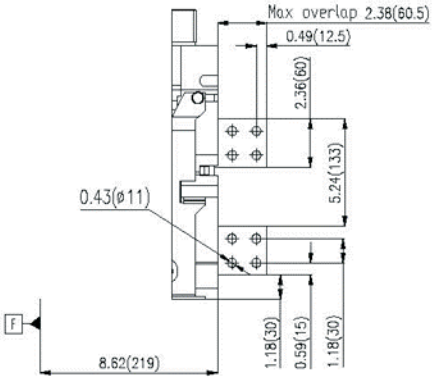

© 2024 NOARK Electric

A32 Series Power Circuit Breakers

Product Overview

NOARK Electric is proud to offer its A32 family of Power Circuit Breakers, Non-Automatic Disconnect Switches, and accessories. Our A32 products are optimized for OEMs and are manufactured under world-class quality systems in our ISO accredited factories. Like all NOARK products, these breakers are designed to deliver high quality, superior performance, and outstanding value.

A32 Power Circuit Breakers are available up to 3200 amps and are capable of IC ratings up to 100kA at 635 Volts. UL Listed and CSA Certified, the A32 family of products provide design standardization for OEM's no matter where they do business. A32 breakers offer a broad range of available trip units, accessories, and communications options. They are the ideal OEM solution for low voltage switchgear and customized power distribution assemblies used in Data Centers, Standby Power, Industrial, Healthcare and Commercial applications.

Ratings

- 800A through 3200A
- IC ratings up to 100kA at 635 Vac
- Short-Time Withstand, 100kA at 635 Vac
- 50 or 60 Hz operation
- 3 Pole and 4 Pole designs
- 10,000 Operations, before maintenance (Mechanical)
- 6000 Operations, before maintenance (Electrical)
- Meets ANSI C37.13, C37.16, C37.17 and C37.50

Protection & Control Options

- LS[1], LSI[2] or LSIG[3] Protection
- Standard LED display
- Color LCD display available
- Optional multi-metering trip unit (H model) with total harmonic distortion analysis and waveform capture
- Stored energy operating mechanism
- AC and DC rated motor operators, shunt trip and undervoltage release accessories
- Arc Flash Reduction Maintenance Mode
- ELM10 maintenance switch, compatible with 'H' model trip unit only
- Zone Selective Interlocking
- RS-485 Modbus Communication available

Approvals

- UL 1066, Low-Voltage AC and DC Power Circuit Breakers
- CSA C22.2 No. 31
- ANSI C37.13 Low Voltage Power Circuit Breakers
- ANSI C37.16 Low Voltage Power Circuit Breakers Ratings, Related Requirements and Applications
- ANSI C37.17 – IEEE Standard for Trip Systems
- ANSI C37.50 – Low Voltage AC Power Circuit Breakers, Test Procedure

Design Features

- UL/CSA field-installable accessories
- Rear horizontal or vertical connections
- Through-the-door design
- 3 Pole and 4 Pole designs
- OEM optimized Cassette
- Phase barriers (optional)
- Available as Disconnect Switch (ASD32)

1. LI: Long Time-delay Overload and Instantaneous Short Circuit.
2. LSI: Long Time-delay Overload, Short Time-delay Short Circuit, and Instantaneous Short Circuit
3. LSIG: Long Time-delay Overload, Short Time delay Short Circuit, Instantaneous Short Circuit, and Equipment Ground Fault

© 2024 NOARK Electric

A32 Series Power Circuit Breakers

Product Label

An extensive range of accessories are available for the A32 power (air) circuit breakers. Each accessory can be installed as an independent unit, thanks to the modular architecture of the A32. This makes installation and maintenance fast and simple for technicians.

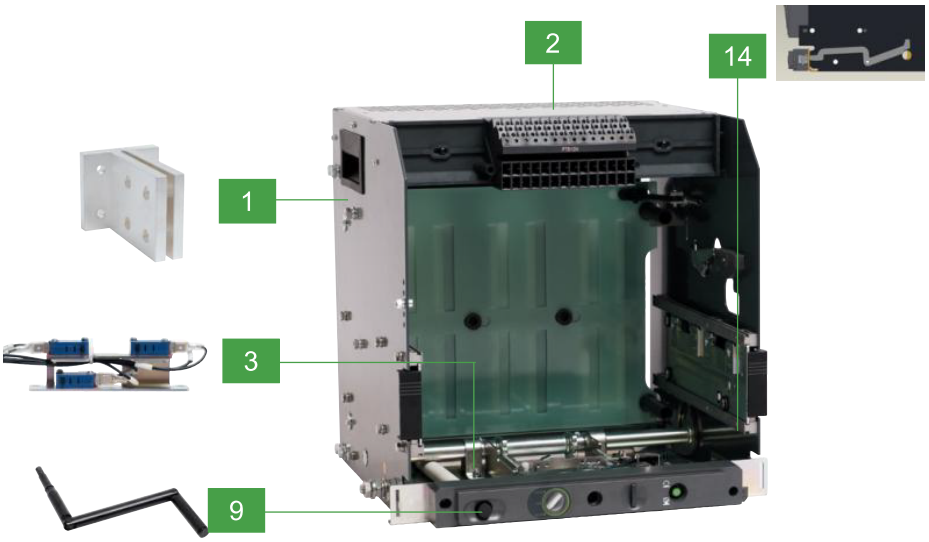

1. Rear connection plate
2. Cassette
3. Position indicator
4. Ready to close contact
5. Auxiliary contact
6. Pushbutton lock device
7. OFF position key lock
8. Trip unit
9. Racking handle
10. Door frame
11. Motor Operator
12. Accessory Compartment
    Under-voltage release
    Shunt trip release
    Closing release
13. Mechanical interlocks with cables
14. Door interlocks for drawout type

© 2024 NOARK Electric

A32 Series Power Circuit Breakers

Product Selection Guide

A32/ASD32 Product Selection Guide

A	32	H	3	F	H	800
NOARK UL 1066 Power Circuit Breakers	Frame Size	Interrupting/Short time withstanding Rating	Poles	Mounting Type	Terminal Connection	Rated Current
A: Circuit Breaker	32: 3200A	Q: 65 kA	3: 3 Poles	F: Fixed	H: Horizontal	800: 800A
ASD: Non-Auto Switch		R: 85 kA	4: 4 Poles	D: Drawout[2]	V: Vertical[1]	1600: 1600A
		H: 100 kA				2000: 2000A
						2500: 2500A
						3200: 3200A

Cassette Product Selection Guide

CAS12	N	3	H	1600
Cassette	Device Category	Poles	Terminal Connection	Rated Current
CAS12	N: UL	3: 3 Poles	H: Horizontal	1600: 800A, 1600A
		4: 4 Poles	V: Vertical[1]	2500: 2000A, 2500A
				3200: 3200A

1. 3200A is available with vertical terminal connectors only.
2. Cassette included with Drawout Frame

Note: An assembled breaker unit must include: - ACB breaker Frame and Trip unit.
Trip Unit need to be ordered separately.
For full list of optional accessories, see Page 37-43.
For PCB Selection Guide, see Appendix I on Page 44

© 2024 NOARK Electric

A32 Series Power Circuit Breakers

A32/ASD32 Products

Product Family	Number of Poles	Frame Type	Connection Type	Rated Current (A)	Q Interrupting 65kA @ 600 Vac		R Interrupting 85kA @ 600 Vac		H Interrupting 100kA @ 600 Vac	
					Catalog Number	Part Number	Catalog Number	Part Number	Catalog Number	Part Number
A32 Breaker	3	Fixed	Horizontal	800	A32Q3FH800	1800000	A32R3FH800	1800034	A32H3FH800	1800068
				1600	A32Q3FH1600	1800001	A32R3FH1600	1800035	A32H3FH1600	1800069
				2000	A32Q3FH2000	1800002	A32R3FH2000	1800036	A32H3FH2000	1800070
				2500	A32Q3FH2500	1800003	A32R3FH2500	1800037	A32H3FH2500	1800071
			Vertical	800	A32Q3FV800	1800004	A32R3FV800	1800038	A32H3FV800	1800072
				1600	A32Q3FV1600	1800005	A32R3FV1600	1800039	A32H3FV1600	1800073
				2000	A32Q3FV2000	1800006	A32R3FV2000	1800040	A32H3FV2000	1800074
				2500	A32Q3FV2500	1800007	A32R3FV2500	1800041	A32H3FV2500	1800075
				3200	A32Q3FV3200	1800450	A32R3FV3200	1800451	A32H3FV3200	1800452
		Drawout	Horizontal	800	A32Q3DH800	1800008	A32R3DH800	1800042	A32H3DH800	1800076
				1600	A32Q3DH1600	1800009	A32R3DH1600	1800043	A32H3DH1600	1800077
				2000	A32Q3DH2000	1800010	A32R3DH2000	1800044	A32H3DH2000	1800078
				2500	A32Q3DH2500	1800011	A32R3DH2500	1800045	A32H3DH2500	1800079
			Vertical	800	A32Q3DV800	1800012	A32R3DV800	1800046	A32H3DV800	1800080
				1600	A32Q3DV1600	1800013	A32R3DV1600	1800047	A32H3DV1600	1800081
				2000	A32Q3DV2000	1800014	A32R3DV2000	1800048	A32H3DV2000	1800082
				2500	A32Q3DV2500	1800015	A32R3DV2500	1800049	A32H3DV2500	1800083
				3200	A32Q3DV3200	1800016	A32R3DV3200	1800050	A32H3DV3200	1800084
ASD32 Disconnect Switch	3	Fixed	Horizontal	800	ASD32Q3FH800	1800102	ASD32R3FH800	1800136	ASD32H3FH800	1800170
				1600	ASD32Q3FH1600	1800103	ASD32R3FH1600	1800137	ASD32H3FH1600	1800171
				2000	ASD32Q3FH2000	1800104	ASD32R3FH2000	1800138	ASD32H3FH2000	1800172
				2500	ASD32Q3FH2500	1800105	ASD32R3FH2500	1800139	ASD32H3FH2500	1800173
			Vertical	800	ASD32Q3FV800	1800106	ASD32R3FV800	1800140	ASD32H3FV800	1800174
				1600	ASD32Q3FV1600	1800107	ASD32R3FV1600	1800141	ASD32H3FV1600	1800175
				2000	ASD32Q3FV2000	1800108	ASD32R3FV2000	1800142	ASD32H3FV2000	1800176
				2500	ASD32Q3FV2500	1800109	ASD32R3FV2500	1800143	ASD32H3FV2500	1800177
				3200	ASD32Q3FV3200	1800456	ASD32R3FV3200	1800457	ASD32H3FV3200	1800458
		Drawout	Horizontal	800	ASD32Q3DH800	1800110	ASD32R3DH800	1800144	ASD32H3DH800	1800178
				1600	ASD32Q3DH1600	1800111	ASD32R3DH1600	1800145	ASD32H3DH1600	1800179
				2000	ASD32Q3DH2000	1800112	ASD32R3DH2000	1800146	ASD32H3DH2000	1800180
				2500	ASD32Q3DH2500	1800113	ASD32R3DH2500	1800147	ASD32H3DH2500	1800181
			Vertical	800	ASD32Q3DV800	1800114	ASD32R3DV800	1800148	ASD32H3DV800	1800182
				1600	ASD32Q3DV1600	1800115	ASD32R3DV1600	1800149	ASD32H3DV1600	1800183
				2000	ASD32Q3DV2000	1800116	ASD32R3DV2000	1800150	ASD32H3DV2000	1800184
				2500	ASD32Q3DV2500	1800117	ASD32R3DV2500	1800151	ASD32H3DV2500	1800185
				3200	ASD32Q3DV3200	1800118	ASD32R3DV3200	1800152	ASD32H3DV3200	1800186

© 2024 NOARK Electric

A32 Series Power Circuit Breakers

A32/ASD32 Products

Product Family	Number of Poles	Frame Type	Connection Type	Rated Current (A)	Catalog Number	Part Number
A32 Drawout Cassette	3	Drawout	Horizontal	800	CAS12N3H1600	1800250
				1600		
				2000	CAS12N3H2500	1800251
				2500		
			Vertical	800	CAS12N3V1600	1800252
				1600		
				2000	CAS12N3V2500	1800253
				2500		
				3200	CAS12N3V3200	1800254

Note: Drawout Frame Selection includes the Cassette. Renewal part only.

© 2024 NOARK Electric

A32 Series Power Circuit Breakers

Technical Specifications

A32 Power Circuit Breakers		A32Q	A32R	A32H
Poles		3 Pole | 4 Pole		
Mounting Type		Fixed | Drawout		
Rated Current (A)	Fixed	800 | 1600 | 2000 | 2500 | 3200		
	Drawout			
Rated Maximum Voltage Vac		254 | 508 | 635		
Frequency (Hz)		50 | 60		
Interrupting rating at rated maximum voltage (kA)	254 Vac	65	85	100
	508 Vac	65	85	100
	635 Vac	65	85	100
Short time withstand rating (kA)	254 Vac	65	85	100
	508 Vac	65	85	100
	635 Vac	65	85	100
Operating time (ms)	Open	<70		
	Close	<40		
Number of operations before maintenance is required	Mechanical	10000		
	Electrical	6000		

ASD32 Non-Automatic Switches		ASD32Q	ASD32R	ASD32H
Poles		3 Pole | 4 Pole		
Installation		Fixed | Drawout		
Rated Current (A)	Fixed	800 | 1600 | 2000 | 2500 | 3200		
	Drawout			
Rated Maximum Voltage (Vac)		254 | 508 | 635		
Frequency (Hz)		50 | 60		
Short time withstand rating (kA)	254 Vac	65 | 85 | 100		
	508 Vac	65	85	100
	635 Vac	65	85	100
Number of operations before maintenance is required	Mechanical	10000		
	Electrical	6000		

Overall Dimensions			Height	Width	Depth
Breaker Frame H×W×D (in)	Fixed	3 Poles 800A~1600A	15.43	16.93	14.61
		3 Poles 2000A~2500A			15.55
		3 Poles 3200A			17.44
		4 Poles 800A~1600A		21.46	14.61
		4 Poles 2000A~2500A			15.55
		4 Poles 3200A			17.44
	Drawout	3 Poles 800A~2500A	16.93	17.13	21.26
		3 Poles 3200A			23.98
		4 Poles800A~2500A		21.65	21.26
		4 Poles 3200A			23.98
Minimum Enclosure HxWxD (in)	Drawout	3 Poles	21.65	23.62	18.11
		4 Poles		25	18.11
	Fixed	3 Poles		20.47	14.17
		4 Poles		25	

Weight lb (kg)		Fixed	Drawout
Power Circuit Breakers - A32	3 Poles 800A~1600A	123 (56)	215 (97)
	3 Poles 2000A~2500A	133 (60)	245 (111)
	3 Poles 3200A	147 (67)	264 (120)
Non-Automatic Switches - ASD32	3 Poles 800A~1600A	117 (53)	208 (95)
	3 Poles 2000A~2500A	126 (57)	239 (208)
	3 Poles 3200A	141 (64)	258 (117)

© 2024 NOARK Electric

A32 Series Power Circuit Breakers

Environmental Conditions

Ambient Temperature

A32 series Circuit breakers can operate in the following environmental conditions:

With M1 Trip Unit: -40℃ ~ 70℃;

With A/H2 Trip Unit: -20℃ ~ 70℃;

A32 series Circuit breakers can operate at higher temperatures than the reference temperature 40℃, in this case, the derating coefficients shown in the table below must be applied.

Model	Rated Current (A)	Temperature (℃)						
		<40	45	50	55	60	65	70
A32	800	100%	100%	100%	100%	100%	100%	100%
	1600	100%	100%	100%	100%	100%	100%	100%
	2000	100%	100%	100%	100%	100%	100%	93%
	2500	100%	95%	92%	88%	83%	80%	75%
	3200	100%	95%	92%	88 %	83%	80%	75%

Altitude

A32 series Circuit breakers do not undergo changes in rated performance up to 2000m. Beyond this altitude, the derating coefficients shown in the table below must be applied.

	Altitude (m)			
	<2000	2600	3900	4900
Rated Voltage (V)	1xUe	0.95xUe	0.8xUe	0.7xUe
Rated Current (A)	1xIn	0.99xIn	0.96xIn	0.94xIn

Humidity

The relative humidity must not exceed 85% at 40°C, while the monthly average maximum of relative humidity in the wettest month must not exceed 90%. The effect of surface condensation caused by temperature changes on product performance should be taken into consideration.

1. 'M' Model: basic protection with LED display.
2. 'A' Model: basic protection, Ammeter and LCD display.
   'H' Model: advance protection, multi-metering, Harmonics detection and LCD display.

© 2024 NOARK Electric

A32 Series Power Circuit Breakers

Dimensions

Fixed Type

800A/1600A - 3P
Vertical installation

in (mm)

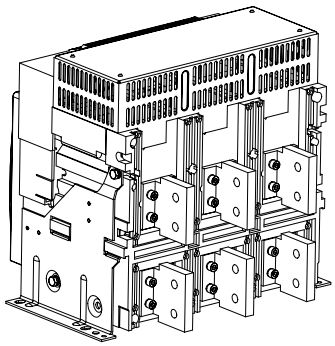

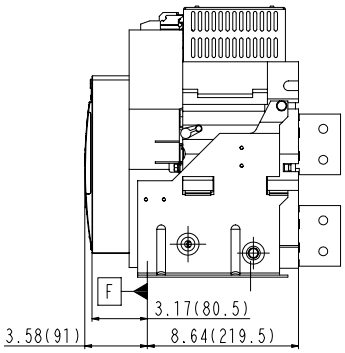

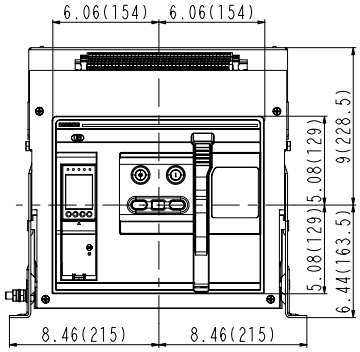

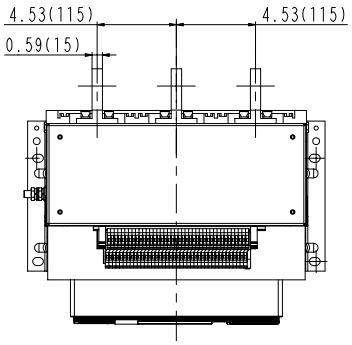

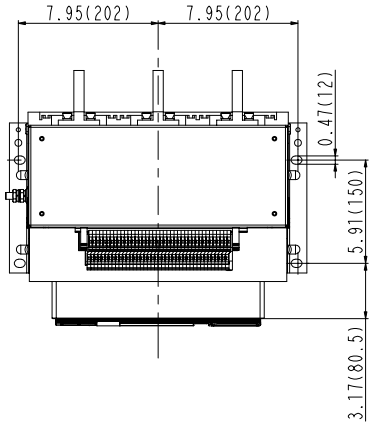

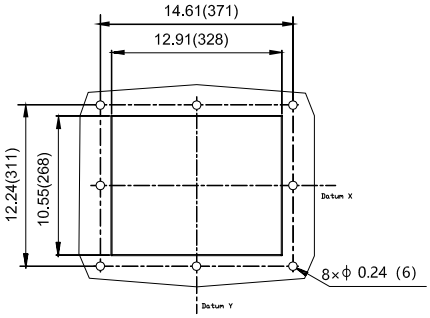

Through-the-door cutout dimensions for
Breaker or Disconnect switch

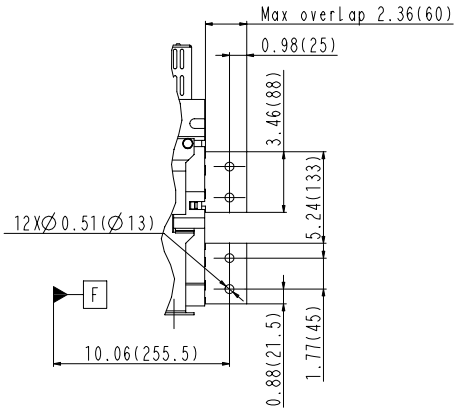

© 2024 NOARK Electric

A32 Series Power Circuit Breakers

Dimensions

Fixed Type

800A/1600A - 3P
Horizontal installation

in (mm)

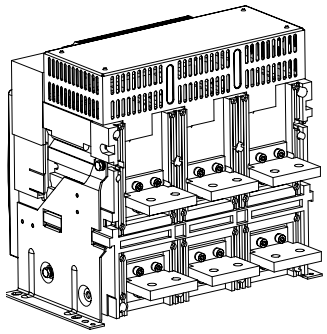

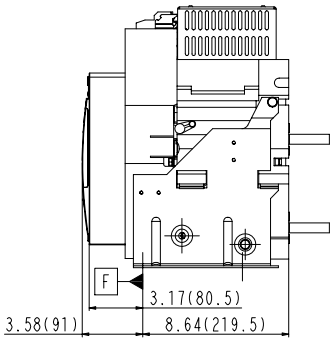

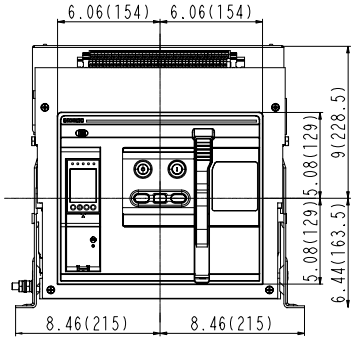

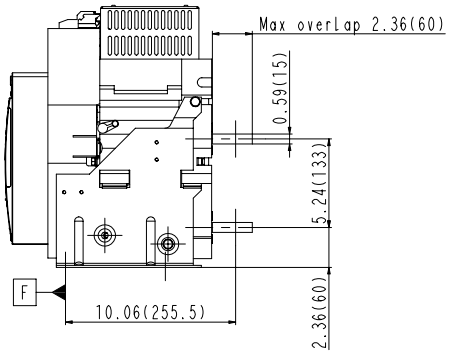

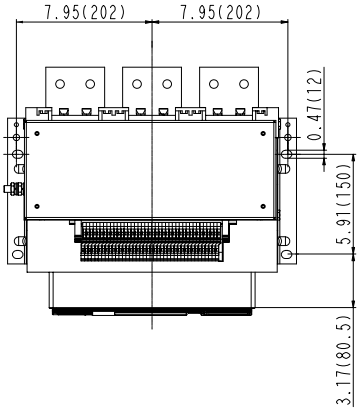

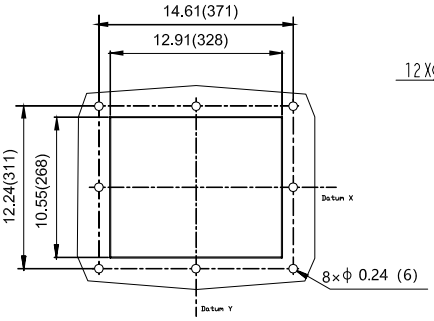

Through-the-door cutout dimensions for
Breaker or Disconnect switch

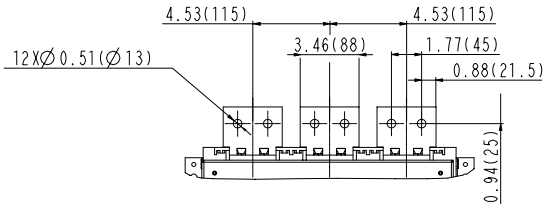

© 2024 NOARK Electric

A32 Series Power Circuit Breakers

Dimensions

Fixed Type

2000A/2500A - 3P
2000A/2500A - 3P

in (mm)

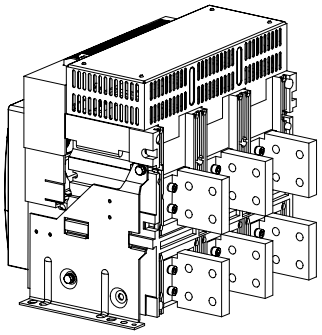

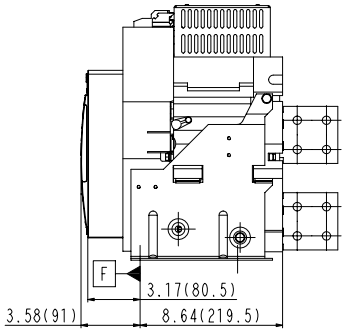

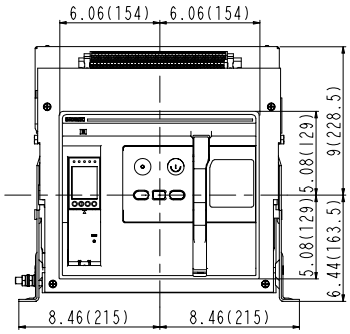

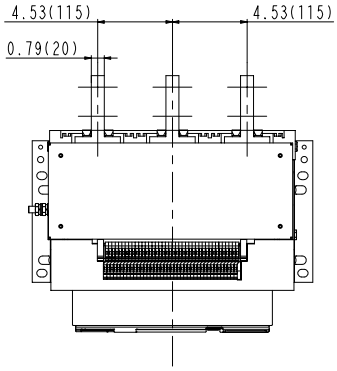

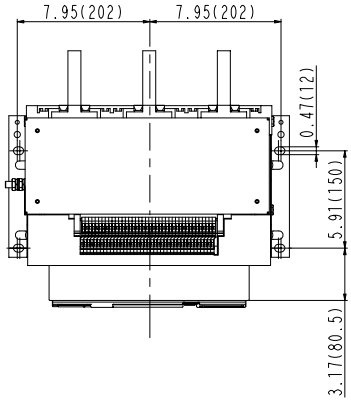

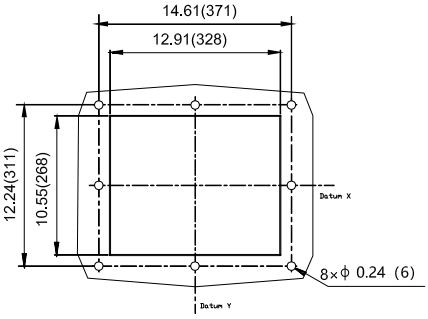

Through-the-door cutout dimensions for
Breaker or Disconnect switch

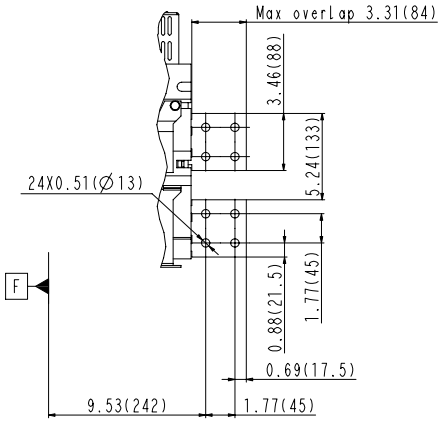

© 2024 NOARK Electric

A32 Series Power Circuit Breakers

Dimensions

Fixed Type

2000A/2500A - 3P
Horizontal installation

in (mm)

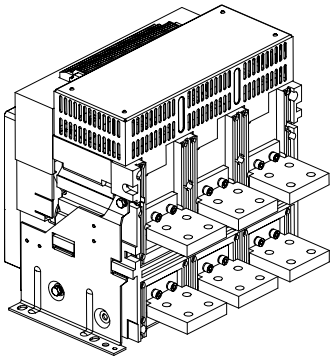

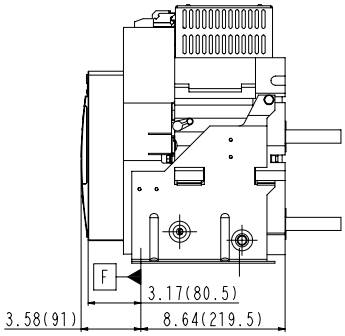

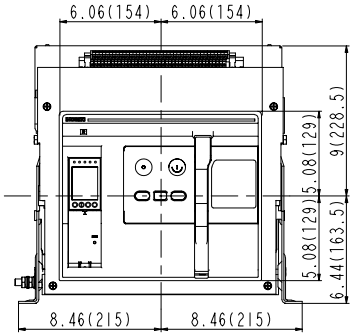

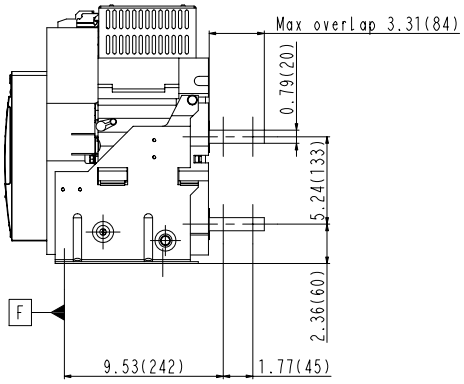

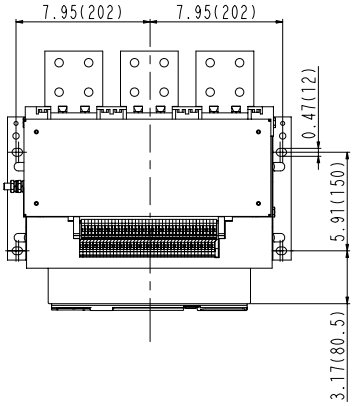

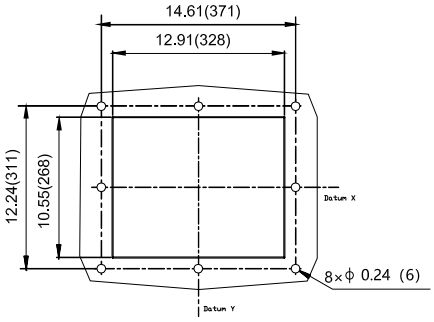

Through-the-door cutout dimensions for
Breaker or Disconnect switch

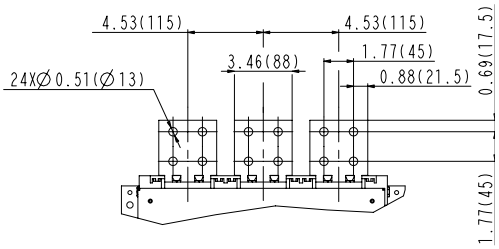

© 2024 NOARK Electric

A32 Series Power Circuit Breakers

Dimensions

Fixed Type

3200A - 3P
Vertical installation

in (mm)

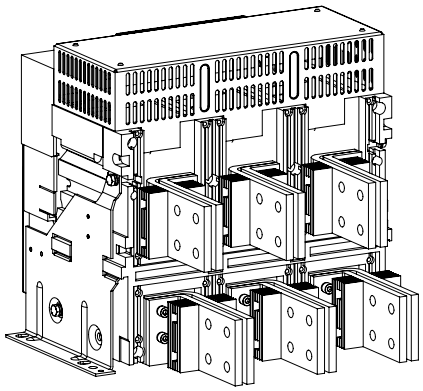

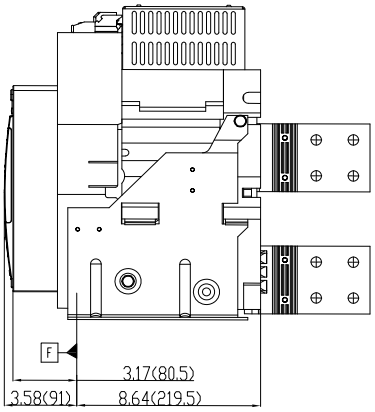

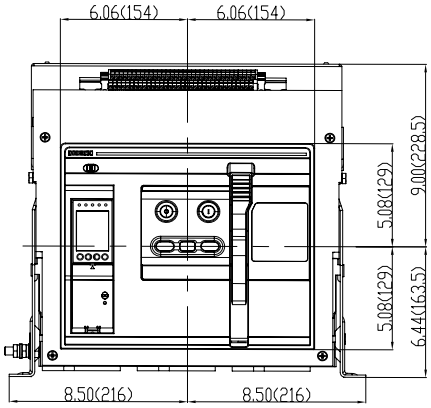

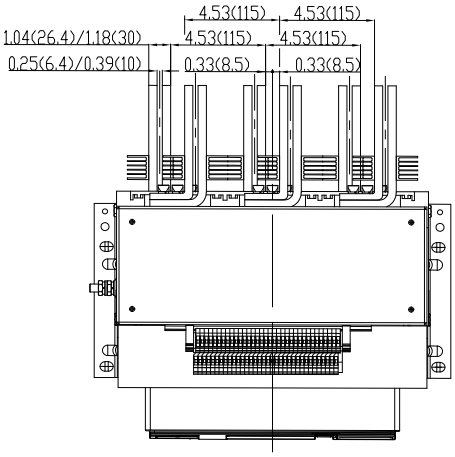

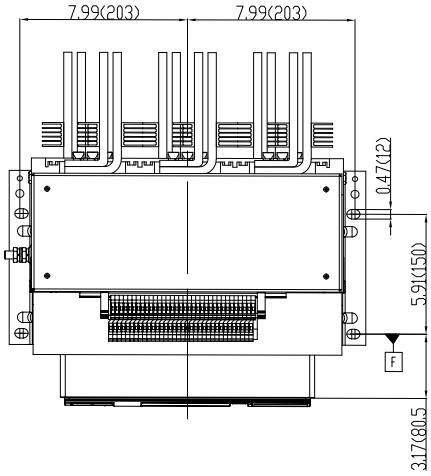

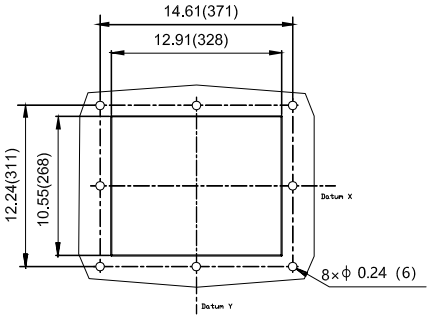

Through-the-door cutout dimensions for
Breaker or Disconnect switch

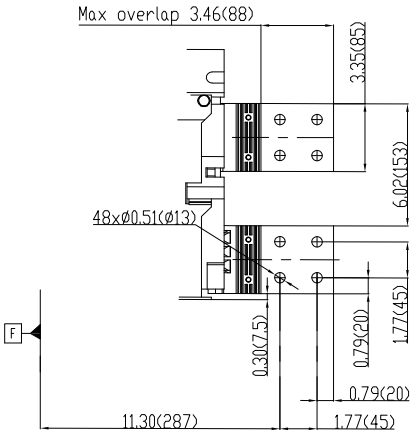

© 2024 NOARK Electric

A32 Series Power Circuit Breakers

Dimensions

Withdrawable Type

800A/1600A - 3P
Vertical installation

in (mm)

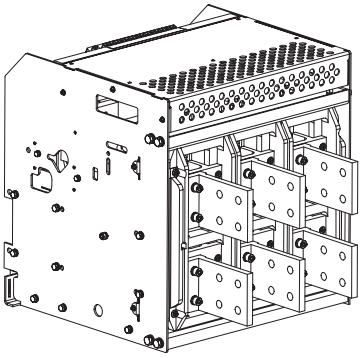

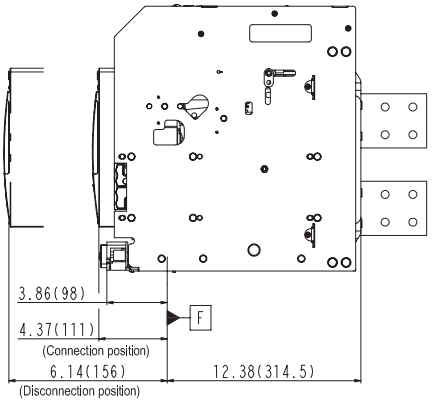

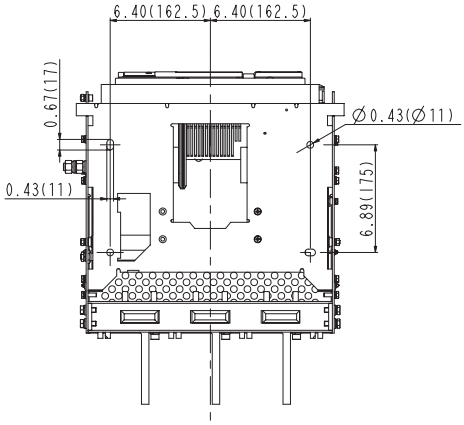

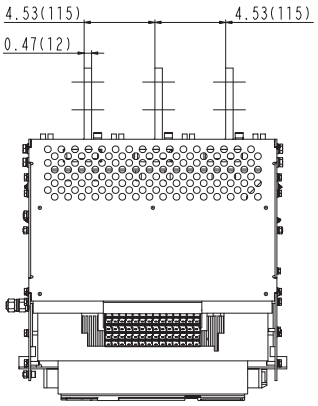

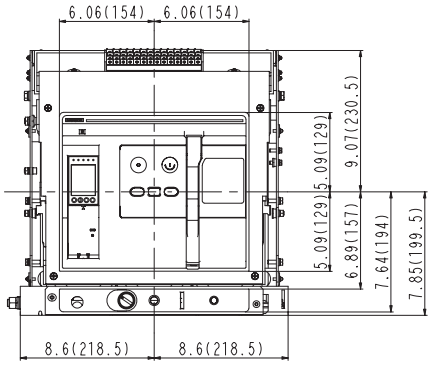

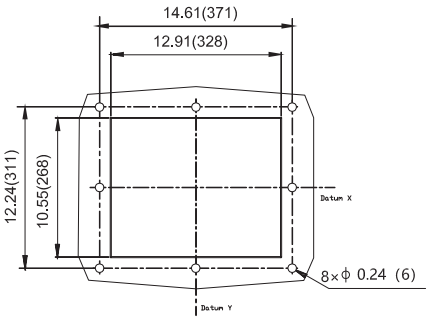

Through-the-door cutout dimensions for
Breaker or Disconnect switch

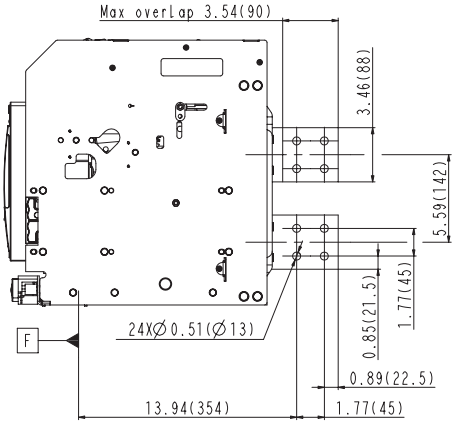

© 2024 NOARK Electric

A32 Series Power Circuit Breakers

Dimensions

Withdrawable Type

800A/1600A - 3P
Horizontal installation

in (mm)

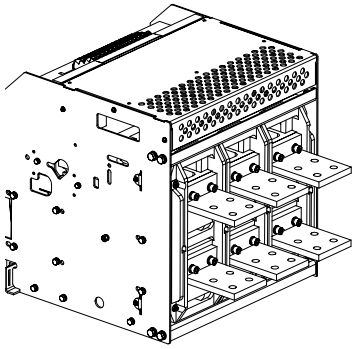

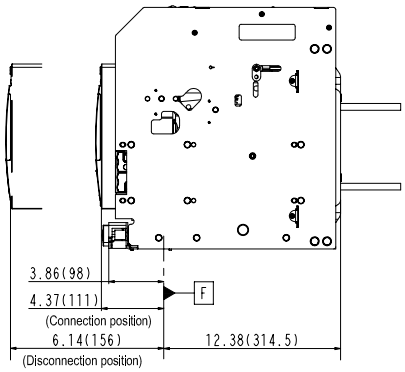

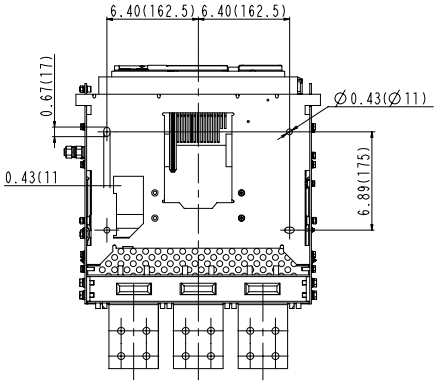

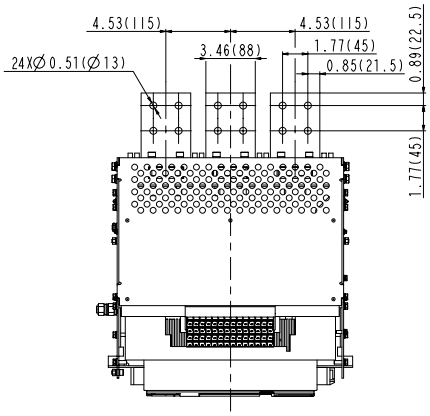

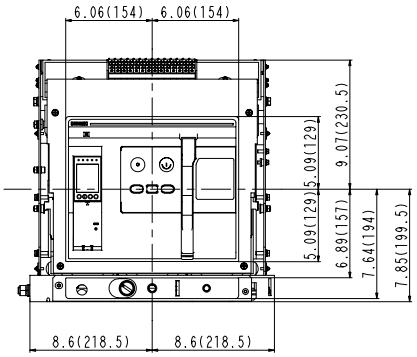

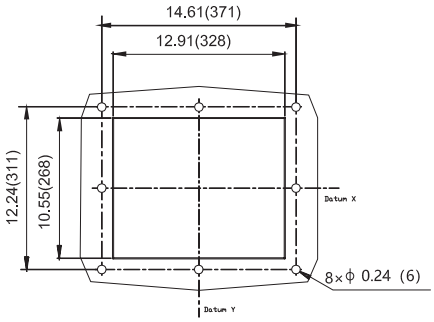

Through-the-door cutout dimensions for
Breaker or Disconnect switch

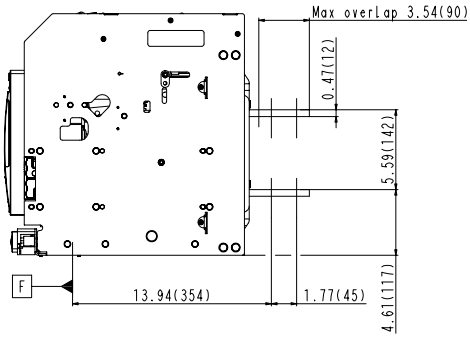

© 2024 NOARK Electric

A32 Series Power Circuit Breakers

Dimensions

Draw out type

A25-1600/2000A-3P
Horizontal connection

in (mm)

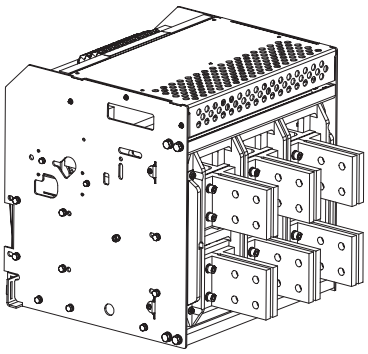

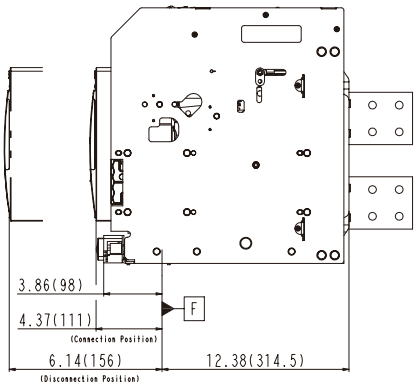

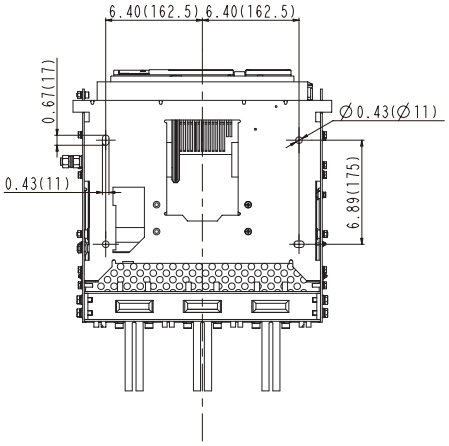

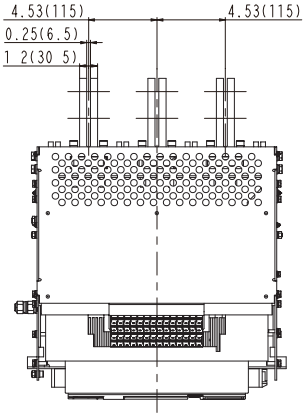

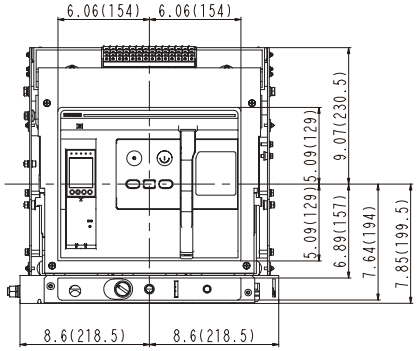

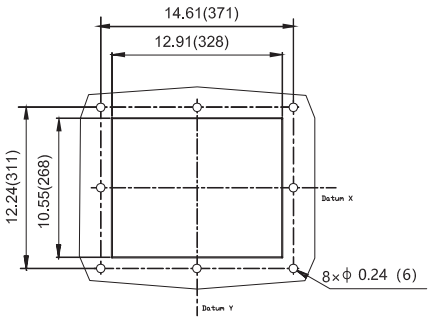

Through-the-door cutout dimensions for
Breaker or Disconnect switch

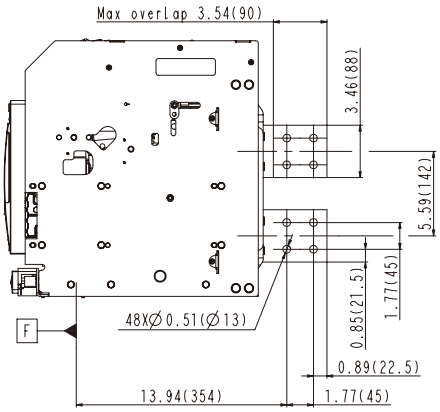

© 2024 NOARK Electric

A32 Series Power Circuit Breakers

Dimensions

Withdrawable Type

2000A/2500A - 3P
Horizontal installation

in (mm)

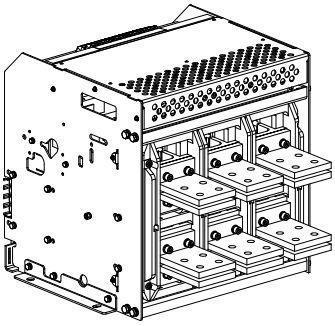

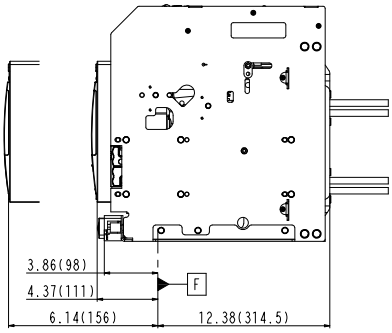

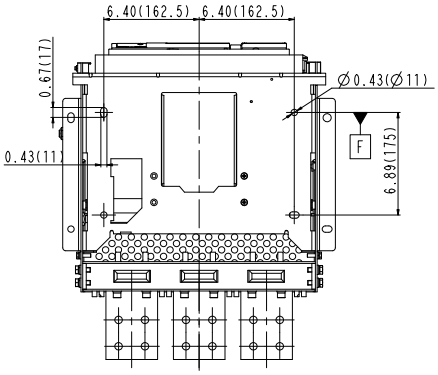

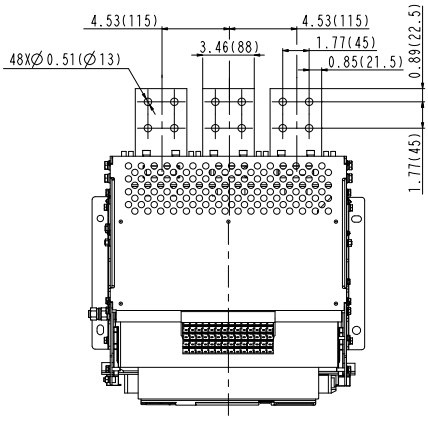

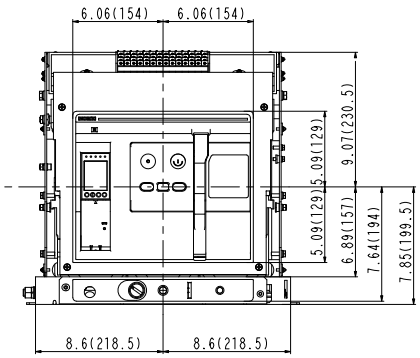

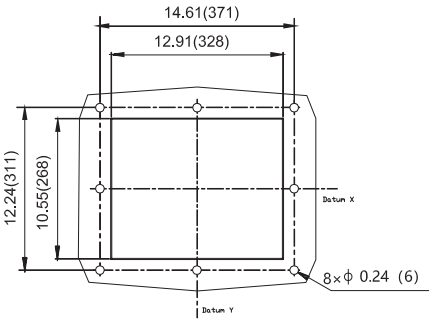

Through-the-door cutout dimensions for
Breaker or Disconnect switch

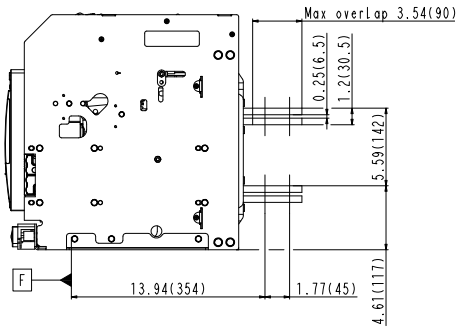

© 2024 NOARK Electric

A32 Series Power Circuit Breakers

Dimensions

Withdrawable Type

3200A - 3P
Vertical installation

in (mm)

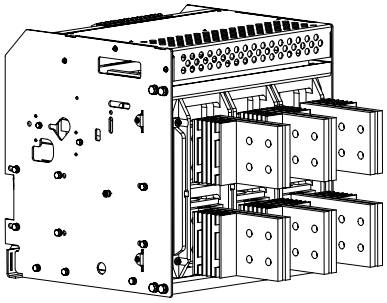

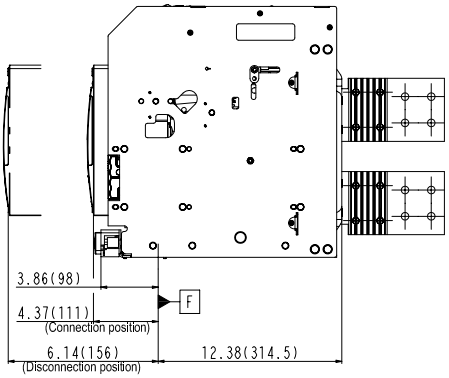

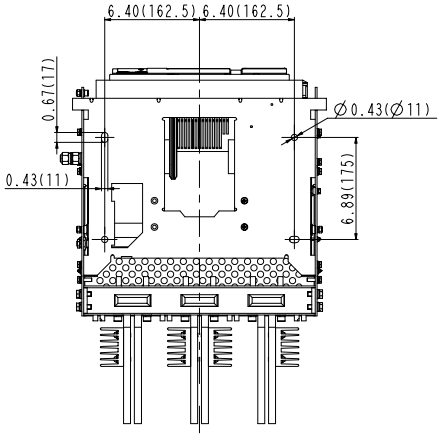

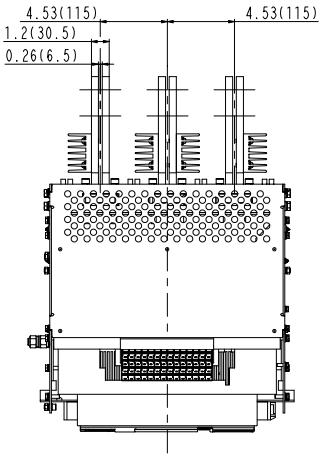

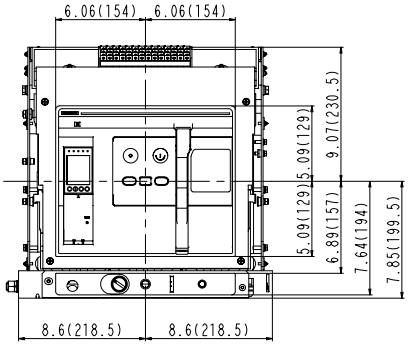

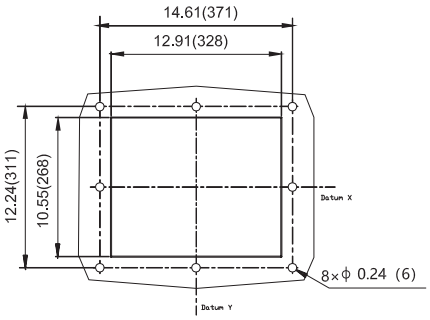

Through-the-door cutout dimensions for
Breaker or Disconnect switch

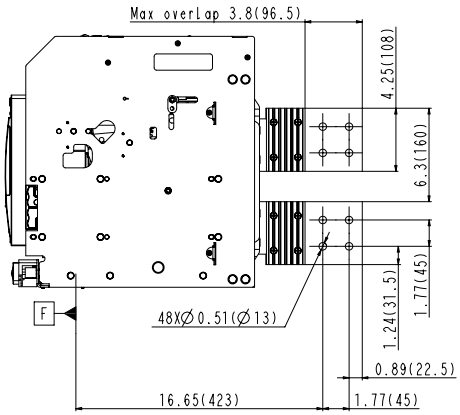

© 2024 NOARK Electric

A40 Series Power Circuit Breakers

Product Overview

A40 Power circuit breakers and the accessories conform with ANSI C37.13, C37.16, C37.17 and C37.50 standards and are UL 1066 certified.

A40 Power Circuit Breakers are available at 4000 amps and are capable of interrupting ratings up to 100kA at 635 Volts, the maximum voltage can be up to 847 Vac. UL Listed and CSA Certified, the A40 family of products provide design standardization for OEM's no matter where they do business.

A40 breakers offer a broad range of available trip units, accessories, and communications options. They are the ideal OEM solution for low voltage switchgear and customized power distribution assemblies used in Data Centers, Standby Power, Industrial, Healthcare and Commercial applications.

Ratings

- 254 Vac to 847 Vac
- 4000A
- Interrupting Capacity ratings up to 100kA @ 635 Vac and 85kA at 847 Vac
- Short-Time Withstand, 100kA @ 635 Vac and 85kA at 847Vac
- 50 or 60 Hz operation
- 3 Pole and 4 Pole designs
- 10,000 Operations, before maintenance (Mechanical)
- 4000 cycles @ 635 Vac, 3000 cycles @ 847Vac before maintenance (Electrical)
- Meets ANSI C37.13, C37.16, C37.17 and C37.50

Approvals

- UL 1066, Low-Voltage AC and DC Power Circuit Breakers
- ANSI C37.13 Low Voltage Power Circuit Breakers
- ANSI C37.16 Low Voltage Power Circuit Breakers Ratings, Related Requirements and Applications
- ANSI C37.17 – IEEE Standard for Trip Systems
- ANSI C37.50 – Low Voltage AC Power Circuit Breakers, Test Procedure

Protection & Control Options

- LS[1], LSI[2] or LSIG[3] Protection
- Standard LED display
- Color LCD display available
- Optional multi-metering trip unit (H model) with total harmonic distortion analysis and waveform capture
- Stored energy operating mechanism
- AC and DC rated motor operator, shunt trip and undervoltage release accessories
- Arc Flash Reduction Maintenance Mode
- ELM10 maintenance Switch, compatible with 'H' model trip unit only.
- Voltage Conversion Module for high voltage protections
- Neutral CT - solid bar or rope type for neutral protections
- Zone Selective Interlocking
- RS-485 Modbus Communication available

Design Features

- Compact size with 3P breaker width 17.76 inches (451MM) only
- UL field-installable accessories
- 3 Pole and 4 Pole designs
- Phase barriers (optional)
- Available as Disconnect Switch (ASD40)

1. LI: Long Time-delay Overload and Instantaneous Short Circuit.
2. LSI: Long Time-delay Overload, Short Time-delay Short Circuit, and Instantaneous Short Circuit
3. LSIG: Long Time-delay Overload, Short Time delay Short Circuit, Instantaneous Short Circuit, and Equipment Ground Fault

© 2024 NOARK Electric

A40 Series Power Circuit Breakers

Product Label

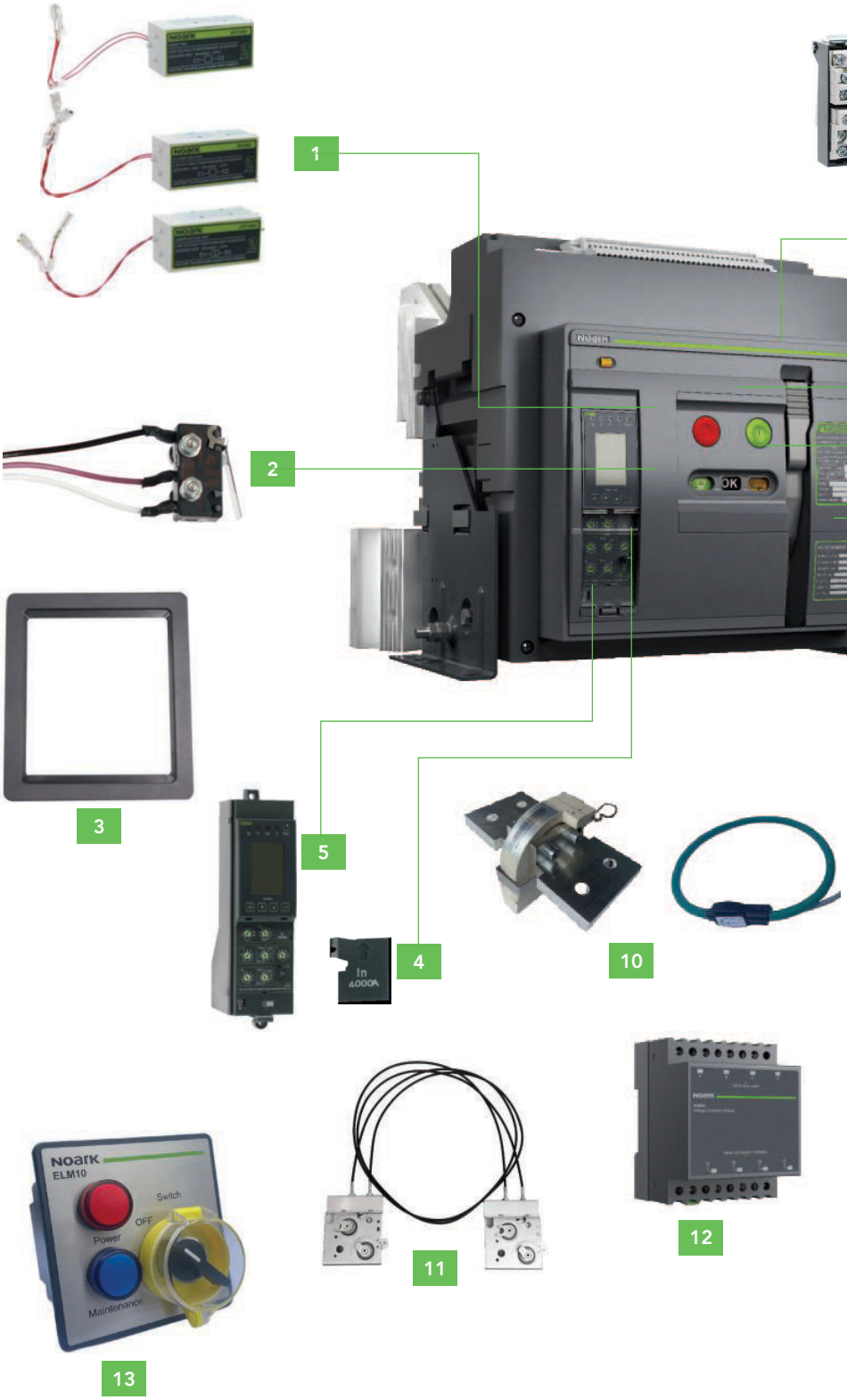

1. Shunt trip release
   Under-voltage release
   Closing release
2. Ready to close contact
3. Door frame
4. Rating plug
5. Trip unit
6. Auxiliary contact
7. OFF position key lock
8. Pushbutton lock device
9. Motor Operator
10. External current transformer for Neutral
11. Mechanical interlocks with cables
12. Voltage conversion module
13. Energy-limiting maintenance switch

© 2024 NOARK Electric

A40 Series Power Circuit Breakers

Product Selection Guide

A40/ASD40 Product Selection Guide

A	40	H	3	F	H	4000
NOARK UL 1066 Power Circuit Breakers	Frame Size	Interrupting/Short time withstanding Rating	Poles	Mounting Type	Terminal Connection	Rated Current
A: Circuit Breaker	40: 4000A	Q: 65kA @ 847 Vac	3: 3 Poles	F: Fixed	V: Vertical[1]	4000: 4000A
ASD: Non-Auto Switch		R: 85kA @ 635 Vac 75kA @ 847 Vac	4: 4 Poles			
		H: 100kA @ 635 Vac 85kA @ 847 Vac				

1. 4000A is available with vertical terminal connectors only.
   Note: An assembled breaker unit must include the ACB breaker Frame and Trip unit.
   For full list of optional accessories, see Page 35-41.
   For PCB Selection Guide, see Appendix I on Page 44

© 2024 NOARK Electric

A40 Series Power Circuit Breakers

A40/ASD40 Products

Product Family	Number of Poles	Frame Type	Connection Type	Rated Current (A)	Interrupting Capacity		Catalog Number	Part Number
					600 Vac	800 Vac		
A40	3	Fixed	Vertical	4000	65kA	65kA	A40Q3FV4000	1800464
					85kA	75kA	A40R3FV4000	1800465
					100kA	85kA	A40H3FV4000	1800466

Product Family	Number of Poles	Frame Type	Connection Type	Rated Current (A)	Interrupting Capacity		Catalog Number	Part Number
					600 Vac	800 Vac		
ASD40	3	Fixed	Vertical	4000	65kA	65kA	ASD40Q3FV4000	1800476
					85kA	75kA	ASD40R3FV4000	1800477
					100kA	85kA	ASD40H3FV4000	1800478

© 2024 NOARK Electric

A40 Series Power Circuit Breakers

Technical Specifications

A40 Power circuit breakers			A40Q	A40R	A40H
Pole			3P/4P		
Mounting Type			Fixed		
Rated current(A)			4000		
Rated Maximum Voltage (Vac)			254/508/635/847		
Frequency (Hz)			50/60		
Interrupting rating at rated maximum voltage (kA)		254 Vac	65	85	100
		508 Vac	65	85	100
		635 Vac	65	85	100
		847 Vac	65	75	85
Short time withstand current (kA)		254 Vac	65	85	100
		508 Vac	65	85	100
		635 Vac	65	85	100
		847 Vac	65	75	85
Operating time (ms)		Open	≤30		
		Close	≤70		
Life cycle (time)	Mechainal	Without maintenance	10000	10000	10000
	Electrical	Without maintenance 635 Vac	4000	4000	4000
		Without maintenance 847 Vac	3000	3000	3000

A40 Non Automatic Switches			ASD40Q	ASD40R	ASD40H
Pole			3P/4P		
Mounting Type			Fixed		
Rated current (A)			4000		
Rated Maximum Voltage (Vac)			254/508/635/847		
Frequency (Hz)			50/60		
Short time withstand current (kA)		254 Vac	65	85	100
		508 Vac	65	85	100
		635 Vac	65	85	100
		847 Vac	65	75	85
Operating time (ms)		Open		≤30	
		Close		≤70	
Life cycle (time)	Mechainal	Without maintenance	10000	10000	10000
	Electrical	Without maintenance 635 Vac	4000	4000	4000
		Without maintenance 847 Vac	3000	3000	3000

Overall Dimensions			Height	Width	Depth
Overall dimensions	Fixed	3P	15.43 (392)	17.76 (451)	12.22 (310.5)
		4P	15.43 (392)	22.32 (567)	12.22 (310.5)

Weight			lb (kg)
A40 Power Circuit Breaker	Fixed	3P	183 (83)
		4P	229 (104)
ASD40 Non-Auto Switch	Fixed	3P	176 (80)
		4P	222 (101)

© 2024 NOARK Electric

A40 Series Power Circuit Breakers

Environmental Conditions

Ambient Temperature

A series Circuit breakers can operate in the following environmental conditions:

With M1 Trip Unit: -40℃ ~ 70℃;

With A/H2 Trip Unit: -20℃ ~ 70℃;

A40 series Circuit breakers can operate at higher temperatures than the reference temperature 40oC, in this case, the derating coefficients shown in the table below must be applied.

Model	Rated Current (A)	Temperature (℃)						
		<40	45	50	55	60	65	70
A40	4000	100%	90%	85%	80%	75%	70%	65%

Altitude

A40 series Circuit breakers do not undergo changes in rated performance up to 2000m. Beyond this altitude, the derating coefficients shown in the table below must be applied

	Altitude (m)			
	<2000	2600	3900	4900
Rated Voltage (V)	1xUe	0.95xUe	0.8xUe	0.7xUe
Rated Current (A)	1xIn	0.99xIn	0.96xIn	0.94xIn

Humidity

The relative humidity must not exceed 85% at 40℃, while the monthly average maximum of relative humidity in the wettest month must not exceed 90%. The effect of surface condensation caused by temperature changes on product performance should be taken into consideration

1. 'M' Model: basic protection with LED display.
2. 'A' Model: basic protection, Ammeter and LCD display.

   'H' Model: advance protection, multi-metering, Harmonics detection and LCD display.

© 2024 NOARK Electric

A40 Series Power Circuit Breakers

Dimensions

Fixed Type

4000A - 3P

Vertical installation

in/mm

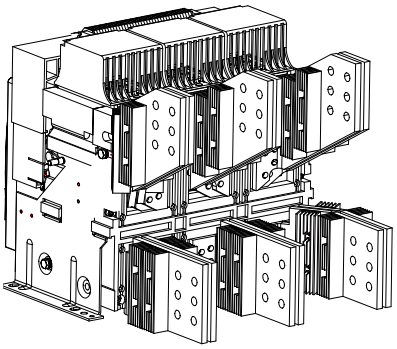

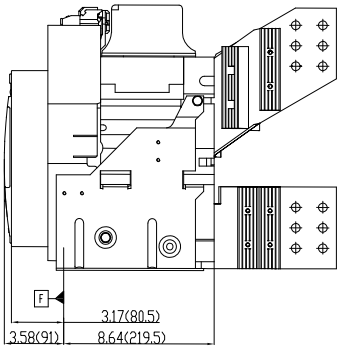

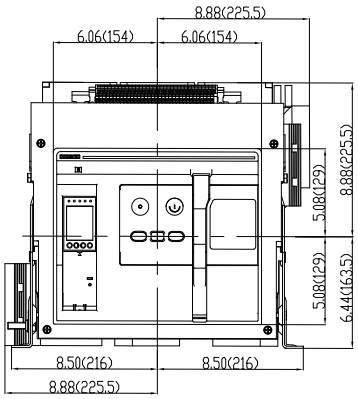

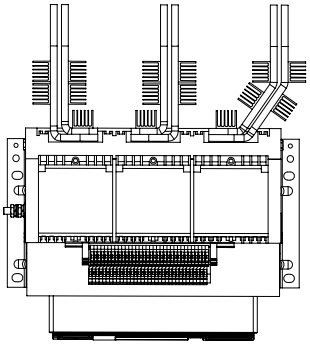

upper busbar

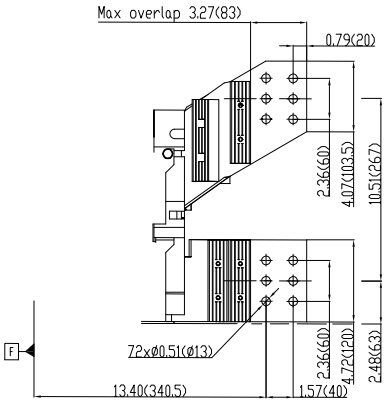

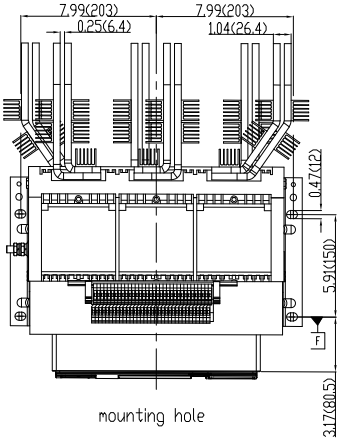

mounting hole

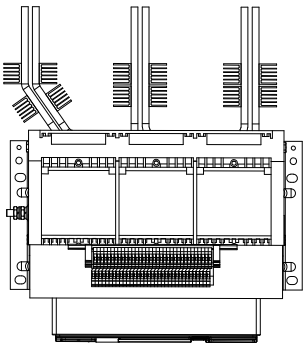

lower busbar

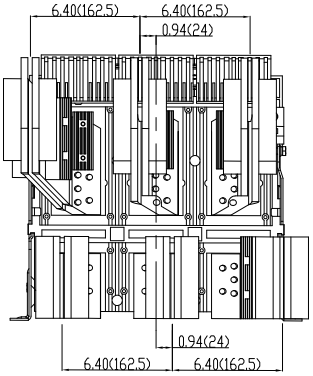

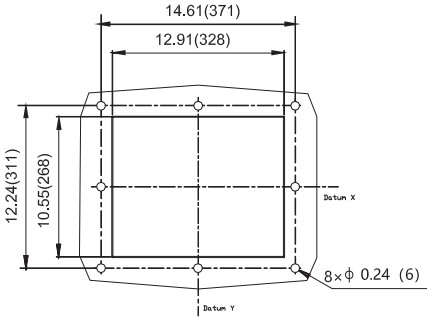

Panel door cut-out dimensions for Breaker or Disconnect switch

© 2024 NOARK Electric

A32 / A40 Series Power Circuit Breakers

Trip Unit Overview

A32/A40 Trip Units offer the advanced electronic protection and control functionality required for power distribution and feeder protection in today's increasingly complex power systems. The A32/A40 trip unit's purpose-built electronic circuits and microprocessors measure the breaker's electrical values against pre-set or userselected parameters for overload, short circuit, current unbalance, over/under voltage, and over/under frequency. When required, a residual ground current transformer provides sensing for ground fault protection.

In addition to the standard LS, LSI and LSIG circuit protection functions, A32/A40 trip units offer advanced Digital Metering, Arc Flash Reduction Mode and Zone Selective Interlocking. Communications capability is available, ensuring that the trip unit's metered values and status can be transmitted to any required monitoring or control networks.

A32/A40 Trip Units consist of three models, each providing different levels of control, display, diagnostics, and communications options, meeting the requirements of a wide range of end-use applications. Each model can be ordered in one of three protection configurations.

Models:

- Model M – LED display
- Model A – Color LCD display with a 3-phase ammeter
- Model H – Color LCD display with multi-metering and total harmonic distortion waveform capture

Protection Configurations:

- LI: Long Time-delay Overload, Instantaneous Short Circuit.
- LSI: Long Time-delay Overload, Short Time-delay Short Circuit, Instantaneous Short Circuit
- LSIG: Long Time-delay Overload, Short Timedelay Short Circuit, Instantaneous Short Circuit, Equipment Ground Fault

Features:

- Microprocessor based true rms sensing
- Discrete rotary trip setting dials
- Cause of trip LEDs
- Unit status LED
- Making / breaking protection (MCR[1])
- Ready-To-Close Indicator
- Available zone selective interlocking
- Available arc flash reduction mode
- Available RS-485 communications
- USB port for power & communication
- Service short circuit protection (HSISC[2])

1. The MCR function immediately trips the circuit breaker (<50ms) when the short circuit current exceeds the pickup current setting during closing operation. This function prevents the circuit breaker from closing when there is short circuit in the system. After the circuit breaker is closed, the MCR is locked and kept inoperative.

2. The HSISC setting provide backup protection for the circuit breaker. It trips the circuit breaker immediately (<50ms) when the short circuit current exceeds a certain value during normal operation of the circuit breaker. This allows a decrease in the operating time at high short circuit levels possible and it's not affected by the instantaneous protection setting value.

© 2024 NOARK Electric

A32 / A40 Series Power Circuit Breakers

Trip Unit Controls and Indicators Overview

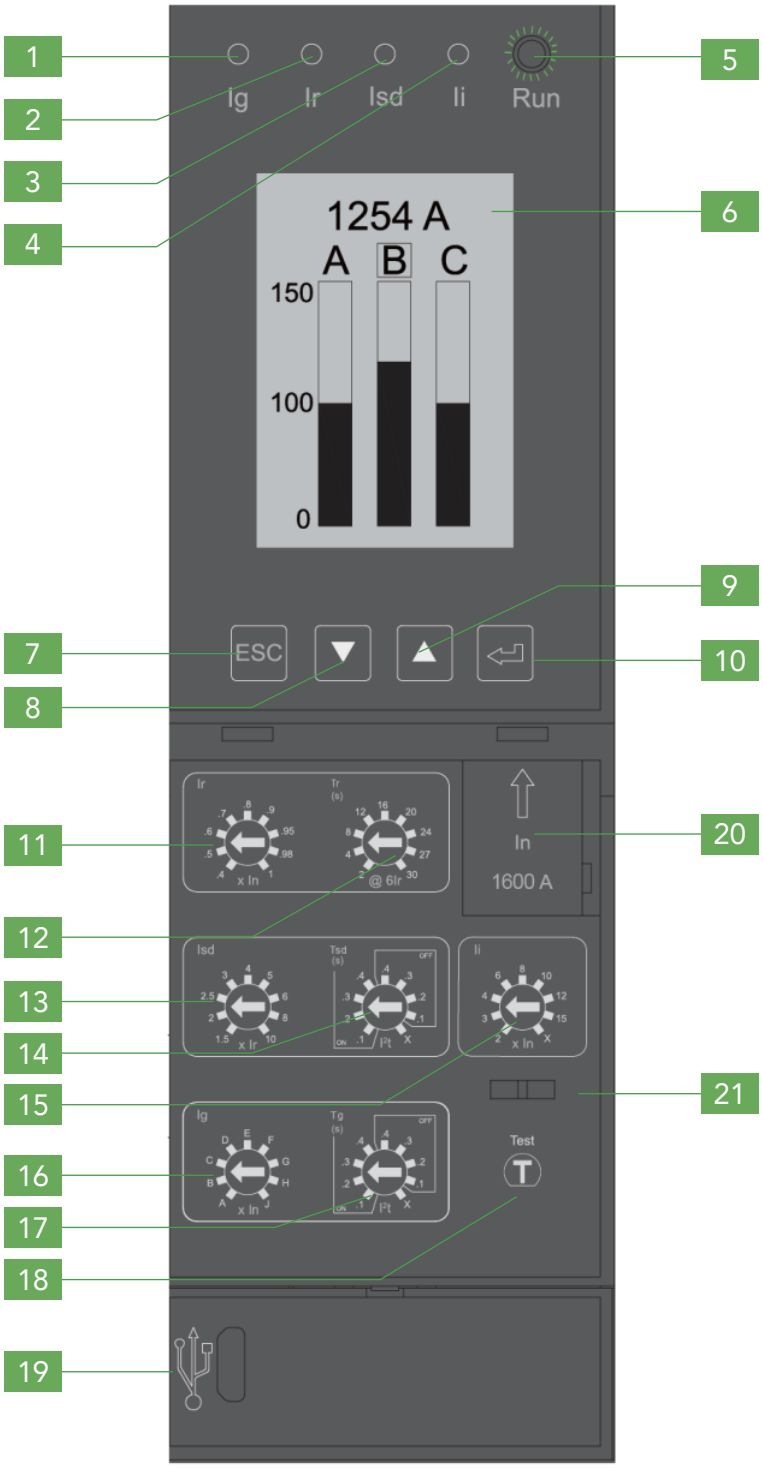

Indicators

1. LED cause of trip indicator (Ig)
2. LED cause of trip indicator (Ir)
3. LED cause of trip indicator (Isd)
4. LED cause of trip indicator (Ii)
5. Running LED indicator
6. Model A and Model H:
   Color LCD display with status indicator
   Green = Normal
   Yellow = Alarm
   Red = Trip
   Model M: Digital LED display

Display Controls

7. Escape button ESC
8. Down selection button
9. Up selection button
10. Enter button

Trip Setting Interface

11. Long time delay current setting (Ir)
12. Long time delay trip time setting (tr)
13. Short time delay current setting (Isd)
14. Short time delay trip time setting (tsd)
15. Instantaneous current setting (Ii)
16. Ground fault current setting (Ig)
17. Ground fault trip time setting (Tg)
18. Trip test button
19. USB port
20. Rating plug
21. Transparent cover lock hook

© 2024 NOARK Electric

A32 / A40 Series Power Circuit Breakers

Trip Unit Products

Standard Trip Unit

Product Family	Protection Type	Control Voltage	NM: LED Display		NA: LCD Display and Ammeter		NH: LCD Display and Harmonic	
			Catalog Number	Part Number	Catalog Number	Part Number	Catalog Number	Part Number
A32/A40 Trip Unit	LI	24Vdc	SU20NMA	1800359	SU20NAA	1800222	SU20NHA	1800362
		110-130Vac	SU20NMC	1800360	SU20NAC	1800223	SU20NHC	1800363
		200-240Vac	SU20NMD	1800361	SU20NAD	1800224	SU20NHD	1800364
	LSI	24Vdc	SU30NMA	1800225	SU30NAA	1800228	SU30NHA	1800365
		110-130Vac	SU30NMC	1800226	SU30NAC	1800229	SU30NHC	1800366
		200-240Vac	SU30NMD	1800227	SU30NAD	1800230	SU30NHD	1800367
	LSIG	24Vdc	SU40NMA	1800231	SU40NAA	1800234	SU40NHA	1800237
		110-130Vac	SU40NMC	1800232	SU40NAC	1800235	SU40NHC	1800238
		200-240Vac	SU40NMD	1800233	SU40NAD	1800236	SU40NHD	1800239

Replacement Trip Unit without Voltage module

A standard trip unit device comes with a voltage module or base. Replacement trip unit can be ordered without the voltage module, however the unit must be calibrated by Noark before it can be installed on the field. Please consult your Noark representative for more information.

Product Family	Protection	Type	Number of Pole	Catalog Number	Part Number
A32/A40 Trip Unit	LSIG	M - LED Display	3	SU12N403M	1800566
			4	SU12N404M	1800567
		A - LCD display and Ammeter	3	SU12N403A	1800568
			4	SU12N404A	1800569
		H - LCD display and Harmonics	3	SU12N403H	1800570
			4	SU12N404H	1800571

© 2024 NOARK Electric

A32 / A40 Series Power Circuit Breakers

Trip Unit Product Selection Guide

SU	30	NH	A
↓	↓	↓	↓
Trip Unit	**Protection Type**	**Model**	**Control Voltage**
SU	20: LI	NM: LED Display	A: 24VDC
	30: LSI	NA: LCD Display & Ammeter	C:110-130VAC
	40: LSIG	NH: LCD Display & Harmonics Metering	D: 200-240VAC

Rating Plug Catalog #
SUIN12N08
IN12N16
IN12N20
IN12N25
IN12N32

A32/A40 Trip Unit Models Display Options

Model	LED Trip Indicator	LCD Display	Alarm Indication	Phase Current Display	Arc Flash Maintenance Mode*	Advanced Protection	Advanced Metering	Zone Selective Interlocking	RS485 Communications (Modbus)
M	Y	N	N	N	Y	N	N	N	N
A	Y	Y	Y	Y	Y	N	N	N	N
H	Y	Y	Y	Y	Y	Y	Y	Y	Y

A32/A40 Trip Unit Protection Features

Type	Protection & Coordination	Setting	Setting Range
Series 2.0 (LI)	Long Delay (L)	Pickup	0.4 to 1.0 x In
		Time	2.0s to 30.0s
	Instantaneous (I)	Pickup	2.0 to 15.0 x @6Ir
Series 3.0 (LSI)	Long Delay (L)	Pickup	0.4 to 1.0 x In
		Time	2.0s to 30.0s
	Short Delay (S)	Pickup	1.5 to 10.0 x @6Ir
		Time	0.1s to 0.4s
			I^2t or Definite Time
	Instantaneous (I)	Pickup	2.0 to 15.0 x In
Series 4.0 (LSIG)	Long Delay (L)	Long Delay Pickup	0.4 to 1.0 x In
		Long Delay Time	2.0s to 30.0s
	Short Delay (S)	Short Delay Pickup	1.5 to 10.0 x @6Ir
		Short Delay Time	0.1s to 0.4s
			I^2t or Definite Time
	Instantaneous (I)	Instantaneous Pickup	2.0 to 15.0 x In
	Ground Fault (G)	Ground Fault Pickup	500A to 1200A
		Ground Fault Time	0.1s to 0.4s
			I^2t or Definite Time

* To use Noark's Energy limiting maintenance remote switch, you must select H model trip unit.

© 2024 NOARK Electric

A32 / A40 Series Power Circuit Breakers

Trip Unit Specifications

Functions	Model M	Model A	Model H
Protection functions			
Long time	•	•	•
Overload pre-alarm	•	•	•
Short time	•	•	•
Instantaneous	•	•	•
Neutral (4-Pole only)	•	•	•
Ground-fault	•	•	•
Current unbalance	•	•	•
Voltage unbalance			•
Overvoltage protection			•
Undervoltage protection			•
Over-frequency			•
Under-frequency			•
Phase sequence			•
Reverse active power			•
Demand value			•
Total Harmonics Distortion			•
Thermal memory	•	•	•
Measurement functions			
Current	•	•	•
Voltage			•
Frequency			•
Power			•
Power factor			•
Ammeter and kilowatt hours			•
Average Demand			•
Total Harmonics Distortion			•
Maintenance function			
Trip records	•	•	•
Alarm records	•	•	•
Operations records	•	•	•
Contact wear records		•	•
Load monitoring			•
Zone Selective Interlocking			•
Arc reduction	•	•	•
Energy limiting Maintenance Remote Switch			•
Test Button	•	•	•
Other functions			
RS485 communication function			•
Digital input/output DI/DO			•
Real time clock		•	•
LED display	•		
Color LCD Display		•	•

© 2024 NOARK Electric

A32 / A40 Series Power Circuit Breakers

Trip Unit Specifications

Protection Functions and Settings

Long Delay protection (L)

Ir - Long Delay Pickup dial setting (multiples of In)	0.40	0.50	0.60	0.70	0.80	0.90	1.0	Tolerance = ±10%	
Tr - Long Delay Time dial setting (s)	2	4	8	12	16	20	24	27	30

Long Delay Trip Times (s)

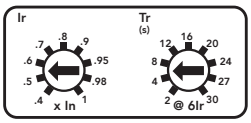

t @1.2 x Ir	< 1h								
t @2.0 x Ir	18	36	72	108	114	180	216	243	270
t @6.0 x Ir	2	4	8	12	16	20	24	27	30

Long time delay inverse time characteristics, $t = \frac{(6Ir)^2}{i^2} \times Tr$

In = Rating plug value, Tr = Long time delay time, Ir = Long time delay current, i = Short circuit current Tolerance = ±40ms or ±10% whichever is greater

Short Delay protection (S)

Isd - Short Delay Pickup dial setting (multiples of In)	1.5	2	2.5	3	4	5	6	8	10	Tolerance = ±10%
Tsd - Short Delay Time dial setting (s)	I^2t ON				I^2t OFF				X	Tolerance = ±40ms or ±10% whichever is greater
	0.1	0.2	0.3	0.4	0.4	0.3	0.2	0.1		

Short Delay Trip Times

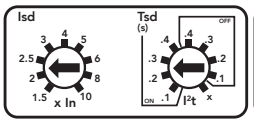

Dial Range	Current Value	Trip Time (s)			
I^2t OFF	< 0.9 x Isd	No Trip			
	> 1.1 x Isd	0.4	0.3	0.2	0.1
I^2t ON	< 0.9 x Isd	No Trip			
	≥1.1 x Isd to ≥10 x Ir	Inverse Time			
	>10 x Ir	0.1	0.2	0.3	0.4
X	Short Delay protection OFF				

Instantaneous protection (I)

Instantaneous current Ii pickup setting (multiples of Ir)	2	3	4	6	8	10	12	15	X	Tolerance ±10%

Instantaneous Trip Times

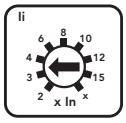

Current Value	Trip Time (s)
< 0.9 x Ii	No Trip
≥1.1 x Ii	Trip time ≥100ms

X = Instantaneous protection OFF

© 2024 NOARK Electric

A32 / A40 Series Power Circuit Breakers

Trip Unit Specifications

Protection Functions and Settings

Ground Fault protection (G)

Ig – Ground Fault Pickup dial setting

Dial Position	A	B	C	D	E	F	G	H	J	
400A <In and ≤1200A	0.2	0.3	0.4	0.5	0.6	0.7	0.8	0.9	1.0	Tolerance = ±10%
In > 1200	500A	640A	720A	800A	880A	960A	1040A	1120A	1200A	

Tg – Ground Fault Delay Time dial setting (s)	I^2t ON					I^2t OFF			X	Tolerance = ±40ms or ±10% whichever is greater
	0.1	0.2	0.3	0.4	0.4	0.3	0.2	0.1		

Ground Fault Trip Times

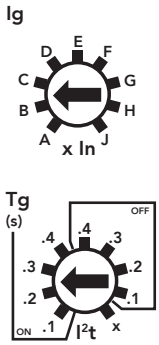

Dial Range	Ground Current Value	Trip Time (s)				
I^2t OFF(s)	<0.9 x Ig >1.1 x Ig	No Trip				In = Rating plug value Ig = Ground Fault Pickup Tg=Ground Fault Time Delay ig = Ground Current
		0.4	0.3	0.2	0.1	
I^2t ON (s)	<0.9 x Ig	No Trip				
	≥1.1x Ig or (ig<In and ig<1200A)	$t = \frac{(1.0In)^2 \times Tg}{ig^2}$ or $t = \frac{(1200)^2 \times Tg}{ig^2}$				
X	Ground Fault protection OFF					

Optional Settings – Model H Only

Function	Parameter	Min	Max	Step
Over Voltage	Pickup	100V	1200V	1V
	Pickup Delay	0.2s	60s	0.1s
	Drop Out	0.2In	Pickup	1V
	Drop Out Delay	0.2s	60s	0.1s
Under Voltage	Pickup	100V	1200V	1V
	Pickup Delay	0.2s	60s	0.1s
	Drop Out	Pickup	Pickup~1200V	1V
	Drop Out Delay	0.2s	60s	0.1s
Voltage Unbalance	Pickup	2%	30%	1%
	Pickup Delay	0.2s	60s	0.1s
	Drop Out	2%	Pickup	1%
	Drop Out Delay	0.2s	60s	0.1s
Current Unbalance	Pickup	5%	60%	1%
	Pickup Delay	0.1s	40s	0.1s
	Drop Out	5%	Pickup	1%
	Drop Out Delay	10s	200s	1s

© 2024 NOARK Electric

A32 / A40 Series Power Circuit Breakers

Trip Unit Specifications

Optional Settings – Model H Only (continued)				
Function	Parameter	Min	Max	Step
Demand Unbalance	Pickup	0.2In	In	1A
	Pickup Delay	15s	1500s	1s
	Drop Out	0.2In	Pickup setting	1A
	Drop Out Delay	15s	3000s	1s
Total Harmonic Distortion (Current)	Pickup	8%	60%	0.5%
	Pickup Delay	1s	120s	1s
	Drop Out	8%	Pickup setting	0.5%
	Drop Out Delay	1s	120s	1s
Total Harmonic Distortion (Voltage)	Pickup	4%	10%	0.1%
	Pickup Delay	1s	120s	1s
	Drop Out	4%	Pickup setting	0.1%
	Drop Out Delay	1s	120s	1s
Load Shedding Method 1 (Control two branch loads independently)	Load 1 Pickup	0.2Ir	1.0Ir	1A
	Load 1 Pickup Delay	20%Tr	80%Tr	1%Tr
	Load 2 Pickup	0.2Ir	1.0Ir	1A
	Load 2 Pickup Delay	20%Tr	80%Tr	1%Tr
Load Shedding Method 2 (Control one branch load)	Pickup	0.2Ir	1.0Ir	1A
	Pickup Delay	20%Tr	80%Tr	1%Tr
	Drop Out	0.2Ir	Pickup setting	1A
	Drop Out Delay	10s	600s	1s
Under Frequency	Pickup	45Hz	65Hz	0.5Hz
	Pickup Delay	0.2s	5s	0.1s
	Drop Out	Start setting	65Hz	0.5Hz
	Drop Out Delay	0.2s	36s	0.1s
Over Frequency	Pickup	45Hz	65Hz	0.5Hz
	Pickup Delay	0.2s	5s	0.1s
	Drop Out	45Hz	65Hz	0.5Hz
	Drop Out Delay	0.2s	36s	0.1s
Reverse Active Power	Pickup	5KW	500KW	1V
	Pickup Delay	0.2s	20s	0.1s
	Drop Out	5KW	Pickup setting	1V
	Drop Out Delay	1s	36s	0.1s
Phase Sequence		Settings: ABC or ACB Instantaneous Trip		

© 2024 NOARK Electric

A32 / A40 Series Power Circuit Breakers

Trip Curves

Selective Protection LSI

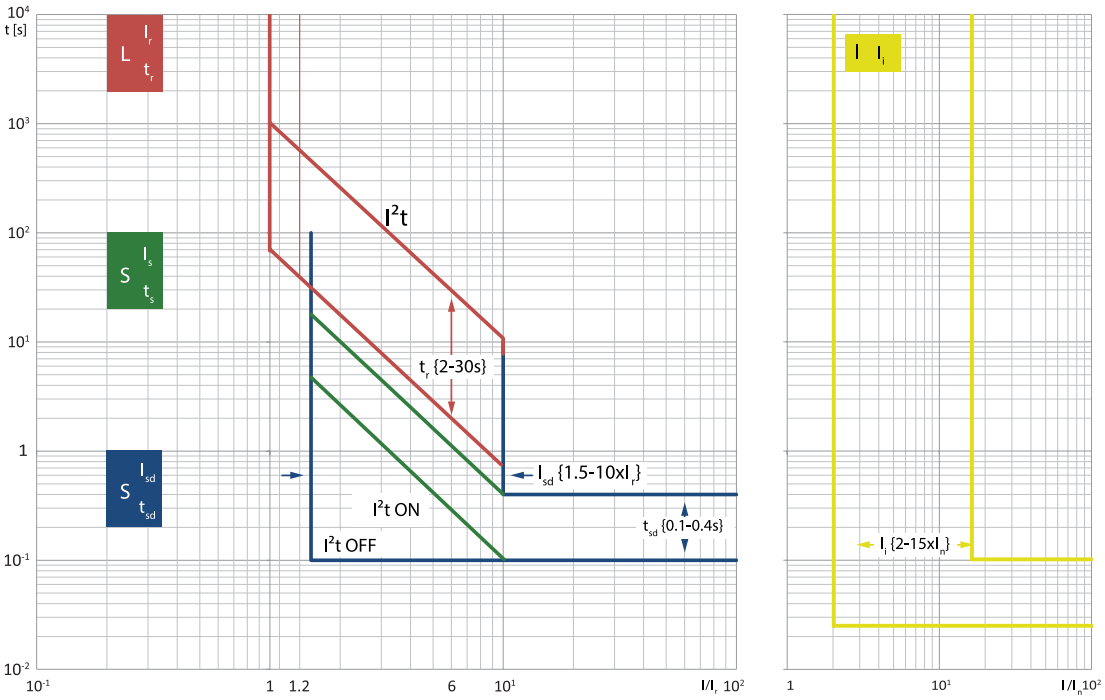

Ground Protection Curve

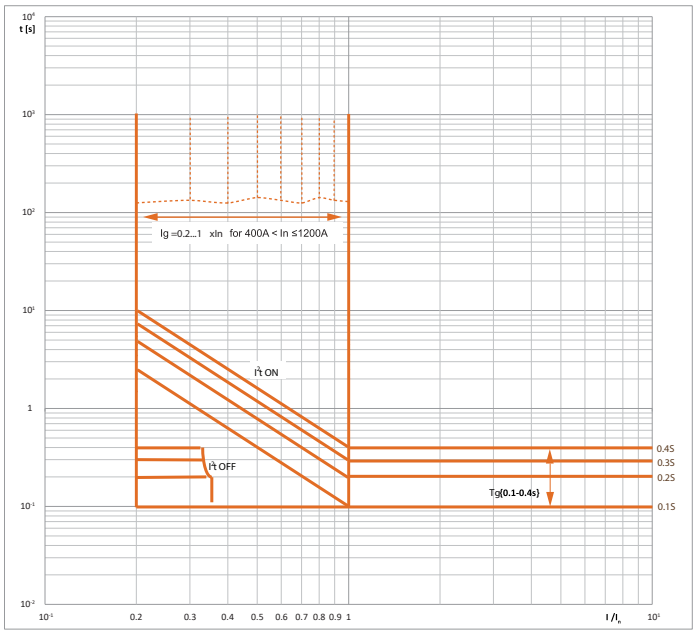

(400A＜In≤1200A)
Setting range of G protection curve

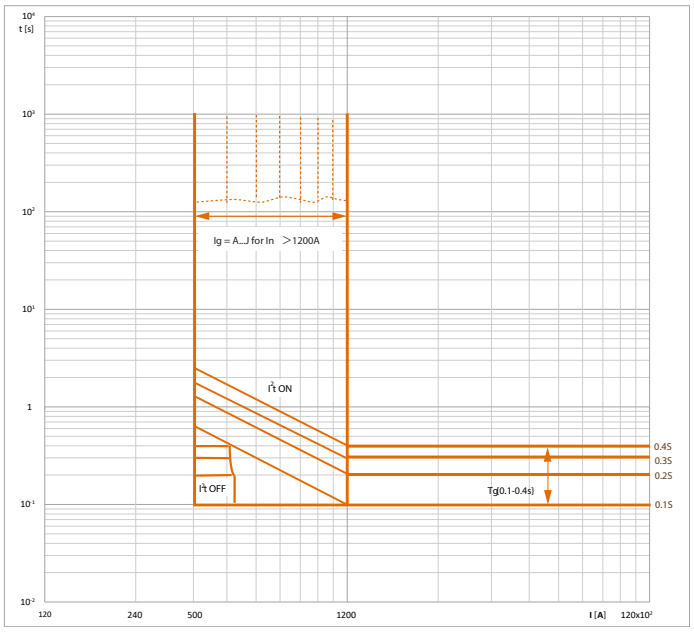

(In＞1200A)
Setting range of G protection curve

© 2024 NOARK Electric

A32 / A40 Series Power Circuit Breakers

Electrical Accessories

Shunt Release: A32/A40

Opens the breaker instantaneously when the coil is energized by a voltage input

Shunt Trip Release			Field Installable		
Catalog Number	Part Number	Control Voltage	Inrush/Continuous Power Consumption (W or VA)	Operational Volitage Range (70–110%)	Operating Time (ms)
SHT12NA	1800272	24~30Vdc	500 / 4.5	17~33Vdc	≤50ms
SHT12NB	1800273	48~60Vac/dc	500 / 4.5	34~66Vac/dc	≤50ms
SHT12NC	1800274	110~130Vac/dc	500 / 4.5	77~143Vac/dc	≤50ms
SHT12ND	1800275	200~240Vac/dc	500 / 4.5	140~264Vac/dc	≤50ms
SHT12NE	1800447	380~440Vac	500 / 4.5	266~484Vac	≤50ms

Closing Release: A32/A40

Remotely closes the circuit breaker when the coil is energized by a voltage input

Closing Release			Field Installable		
Catalog Number	Part Number	Control Voltage	Inrush/Continuous Power Consumption (W or VA)	Operational Volitage Range (70–110%)	Operating Time (ms)
XF12NA	1800264	24~30Vdc	500 / 4.5	17~33Vdc	≤70ms
XF12NB	1800265	48~60Vac/dc	500 / 4.5	34~66Vac/dc	≤70ms
XF12NC	1800266	110~130Vac/dc	500 / 4.5	77~143Vac/dc	≤70ms
XF12ND	1800267	200~240Vac/dc	500 / 4.5	140~264Vac/dc	≤70ms
XF12NE	1800445	380~440Vac	500 / 4.5	266~484Vac	≤70ms

Undervoltage Release: A32/A40

Opens the breaker when the supply voltage falls to 30–60% of rated voltage. If the release is not energized to 85% of its supply voltage, the circuit breaker cannot be closed electrically or manually.

Undervoltage Release			Field Installable			
Catalog Number	Part Number	Control Voltage	Inrush/Continuous Power Consumption (W or VA)	Operational Volitage Range (85–110%)	Dropout Voltage (30–60%)	Operating Time (ms)
UVT12NA	1800281	24~30Vdc	500 / 4.5	20~33Vdc	7 -18 Vdc	≤70ms
UVT12NB	1800282	48~60Vac/dc	500 / 4.5	41~66Vac/dc	14 - 36 Vdc	≤70ms
UVT12NC	1800283	110~130Vac/dc	500 / 4.5	94~143Vac/dc	33 - 78 Vac/Vdc	≤70ms
UVT12ND	1800284	200~240Vac/dc	500 / 4.5	170~264Vac/dc	60 -144 Vac/Vdc	≤70ms
UVT12NE	1800285	380~440Vac	500 / 4.5	323~484Vac	114 - 264 Vac	≤70ms

© 2024 NOARK Electric

A32 / A40 Series Power Circuit Breakers

Electrical Accessories

Auxiliary Contact: A32/A40

Monitors ON/OFF status of the circuit breaker or non-automatic switch and provides contacts to electrically indicate its position remotely. Contact configurations: 44: 4NO and 4NC; 66: 6NO and 6NC; 44C: 4 Form C; 66C: 6 Form C

Auxiliary Contact		Field Installable		
Frame Size	Breaker/Switch	Contacts	Catalog Number	Part Number
A32/ASD32 A40/ASD40	Fixed	4NO+4NC	AX12NF44	1800290
		6NO+6NC	AX12NF66	1800291
		4NO/NC	AX12NF44C	1800292
		6NO/NC	AX12NF66C	1800293
	Drawout	4NO+4NC	AX12ND44	1800298
		6NO+6NC	AX12ND66	1800299
		4NO/NC	AX12ND44C	1800300
		6NO/NC	AX12ND66C	1800301

Voltage (V)		Rated Current (A)
AC	240	5
	480	2
DC	110	0.25
	220	0.25

Position Indicator: A32

Indicates the position of the breaker - connected, testing, disconnected. For drawout type devices only. 3 CO Form C contacts, one contact for each breaker position. Connected to secondary terminals #58, 59, 60 (Connected), #61, 62, 63 (Test), #64, 65, 66 (Disconnected). Factory installed only. - in the scope of delivery there are additional secondary terminals #58-66

Position Indicator	Factory Installable	
Frame Size	Catalog Number	Part Number
A32/ASD32	+EF12N	1800302

© 2024 NOARK Electric

A32 / A40 Series Power Circuit Breakers

Electrical Accessories

Voltage Conversion Module: A40

The Voltage conversion module VCM10 is used to pick up the Power Circuit voltage signal and reduce the voltage. VCM10 is mandatory for voltages higher than 635 Vac, if the type H control unit has been selected and the voltage protection is enabled.

Description	VCM10
Voltage input	0-1500Vac
Power consumption	<1W
Installation	35mm Din-rail
Applicable Trip unit	H
Applicable Software version	0.92 or higher

				Field Installable	
Product	Part Number	Frame Size	Poles	Breaker	Rated Current
+VCM10	1800488	A40	3P/4P	Fixed	4000A

Rear Terminal Connectors: A32/A40

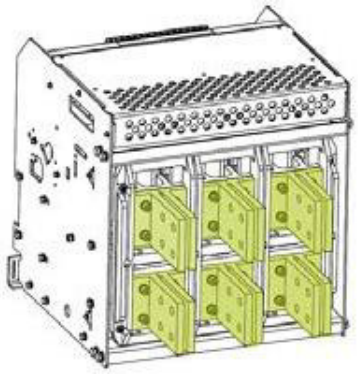

Rear Terminal Connectors				Field Installable	
Frame Size	Poles	Breaker/Switch	Rated Current	Product	Part Number
A32/ASD32	3P	Fixed	800A/1600A	RCP12N3F1600	1800340
		Fixed	2000A/2500A	RCP12N3F2500	1800341
		Fixed	3200A	RCP12N3F3200	1800462
		Withdrawable	800A/1600A	RCP12N3D1600	1800342
		Withdrawable	2000A/2500A	RCP12N3D2500	1800343
		Withdrawable	3200A	RCP12N3D3200	1800344
	4P	Fixed	800A/1600A	RCP12N4F1600	1800345
		Fixed	2000A/2500A	RCP12N4F2500	1800346
		Fixed	3200A	RCP12N4F3200	1800463
		Withdrawable	800A/1600A	RCP12N4D1600	1800347
		Withdrawable	2000A/2500A	RCP12N4D2500	1800348
		Withdrawable	3200A	RCP12N4D3200	1800349
A40/ASD40	3P	Fixed	4000A	RCP13N3F4000	1800489
	4P			RCP13N4F4000	1800490

Note: This item is included with every new A32/A40 Breaker. Renewal part only

© 2024 NOARK Electric

A32 / A40 Series Power Circuit Breakers

Electrical Accessories

External current sensor for Neutral: A32/A40

An external sensor for ground fault protection of three-pole circuit breakers in four-wire network, installed on the neutral conductor, the current sensor enables ground fault protection. A neutral sensor must be ordered with any LSIG trip unit.

	Field Installable	
Frame Size	Catalog Number	Part Number
A32/A40	+NCT12N	1800378

Note: External neutral protection for three-pole breaker only

External current sensor for Neutral: A32/A40

An external sensor for ground fault protection of three-pole circuit breakers in four-wire network, installed on the neutral conductor, the current sensor enables ground fault protection. A neutral sensor must be ordered with any LSIG trip unit.
(The function is same to NCT12N)

Description	RCT1800
Rated primary current	Up to 15000 Amp
Accuracy	±2.5%
Temperatures	Operating: -15OC to 65OC
	Storage: -45OC to 80OC
Humidity rating	85%
Weight	0.34lbs (0.15Kg)
Length of wire	8FT (2.43m)
Coil diameter	6in (152mm)

			Field Installable Only	
Frame Size	Poles	Breaker	Catalog Number	Part Number
A32/A40	3P/4P	Fix/Draw Out	+RCT-1800-COIL 12	1800564

Motor Operator: A32/A40

Charges the closing spring of mechanism when the circuit breaker is closed. Factory installed only. Mechanical charging handle can be used with or without power supply. Equipped with a limit switch contact which signals that spring is charged.

Motor Operator			Field Installable		
Catalog Number	Part Number	Control Voltage	Inrush/Continuous Power Consumption (W or VA)	Operational Volitage Range (85–110%)	Charging time (s)
MD12NA	1800308	24~30Vdc	800 / 200	20~33Vdc	≤4s
MD12NB	1800309	48~60Vac/dc	1200 / 200	41~66Vac/dc	≤4s
MD12NC	1800310	110~130Vac/dc	1800 / 180	94~143Vac/dc	≤4s
MD12ND	1800311	208~240Vac/dc	1800 / 180	177~264Vac/dc	≤4s
MD12NE	1801130	380-440Vac	1800 / 180	323~484Vac	≤4s

© 2024 NOARK Electric

A32 / A40 Series Power Circuit Breakers

Electrical Accessories

Ready To Close Contact: A32/A40

This device is intended to be installed in A32/A40 series power circuit breaker depending on customer's requirements. It is used to indicate whether the operating mechanism can be closed

	Factory Installable	
Frame Size	Catalog Number	Part Number
A32/ASD32 A40/ASD40	+PF12N	1800312

OFF Position Keylock Operated Lock: A32/A40

For A32/A40 Power circuit breaker and Non-automatic switches. Block locks the breaker in the OFF position to ensure the breaker can not be closed. One circuit breaker is provided with one lock and one key. Two circuit breakers are provided with two locks and one key. Three circuit breakers are provided with three locks and two keys.

Off Position Keylock		Field Installable	
Frame Size	Configuration	Catalog Number	Part Number
A32/ASD32 A40/ASD40	1 lock 1 key	KLK12N1	1800319
	2 locks 1 key	KLK12N2	1800320
	2 locks 1 key	KLK12N3	1800321

Energy-limiting maintenance switch: A32/A40

ELM10 is used to mitigate arc hazards and protect personal safety during product maintenance. It should be used in coordination with Power Circuit Breakers with arc reduction. While the Energy limiting function can be set and turned on in all trip unit models (M, A & H), the ELM10 is programmable only with the Harmonic 'H' version trip unit and the applicable software should be 0.91 or higher.

Description	ELM10
Ambient temp (°C)	-20°C+70°C
Rated voltage Ue(V)	AC480V/DC24
Rated frequency (Hz)	50/60
Enclosure protection class	IP40
Electrical/mechanical endurance(times)	1500

Inrush/Continuous Power Consumption (W) = <5W

	Field Installable	
Frame Size	Catalog Number	Part Number
A32/A40	ELM10	1800448

© 2024 NOARK Electric

A32 / A40 Series Power Circuit Breakers

Mechanical Accessories

Door Frame: A32/A40

IP40 Protection

IP40 Door Frame Doorframes for Fixed Type		Field Installable	
Frame Size	Breaker/Switch	Catalog Number	Part Number
A32/ASD32	Fixed	CDP12N	1800324
A40/ASD40*	Drawout	DDP12N	1800323

Note: This item is included with every new A32 or A40 Breaker. Renewal part only

*A40/ASD40: available only in fixed version.

Pushbutton Locking Cover: A32/A40

Prevents access to the control push buttons of the breaker. Factory installed only. Lock is not included

Plastic

Metal

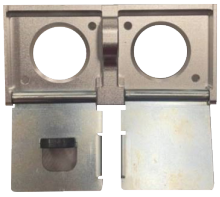

		Factory Installable	
Material	Frame Size	Catalog Number	Part Number
Plastic	A32/ASD32, A40/ASD40	+VBP12N	1800314
Metal	A32/ASD32	+VBP12NM	1800573

Phase Barriers: A32/A40

Provides improved isolation between the terminal connectors on the back of the breaker or cassette

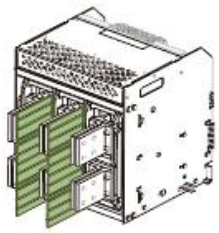

Phase Barrier			Field Installable Only		
Frame Size	Breaker/Switch	Rated Current	Quantity*	Catalog Number	Part Number
A32/ASD32	Fixed	800A - 2500A	2 pcs for 3 poles	PHS12N2	1800334
		3200A	4 pcs for 3 poles	PHS12N4	1800530
	Drawout	800A - 2500A	2 pcs for 3 poles	DPS12N2	1800336
		3200A	4 pcs for 3 poles	DPS12N4	1800532
A40/ASD40	Fixed	4000A	4 pcs for 3 poles	PHS12N4	1800530

* 2 pcs of PHS is required for line and load sides of 3P 800A - 2500A ratings.

4 pcs of PHS is required for line and load sides of 3P 3200A and 4000A rating.

© 2024 NOARK Electric

A32 / A40 Series Power Circuit Breakers

Mechanical Accessories

Mechanical Interlocking with Cables: A32/A40

Cable-connected mechanical interlock mechanism that is used to prevent two interlocked breakers from closing at the same time. interlocking of 2 or 3 (in preparation) breakers. Cable length for Maximum distance between mounting positions of the interlocks is 78in(2m). Suitable for A32/A40 Power circuit breaker and Non-automatic switches.
2 interlocks and 2 cables (2 breakers version), 3 interlocks and 6 cables (3 breakers version)

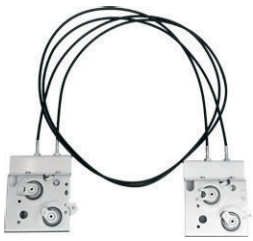

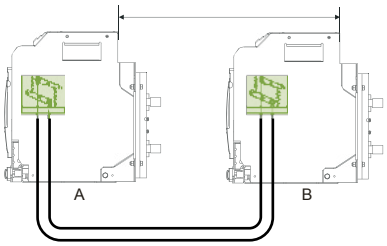

Circuit diagram

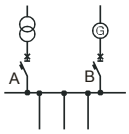

On/Off state

A	B
0	0
1	0
0	1

Mechanical Interlocks with Cables		Factory Installable
Frame Size	**Catalog Number**	**Part Number**
A32/ASD32 A40/ASD40	IPA12N	1800339

Door Interlock: A32

Ensures that the door or cover of distribution board the breaker compartment cannot be opened when the circuit breaker is closed or in its test position.

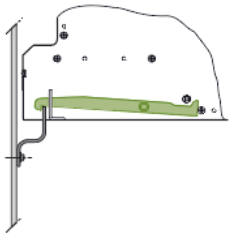

Door Interlocks for Drawout Type		Factory Installable	
Frame Size	**Interlock Type**	**Catalog Number**	**Part Number**
A32/ASD32	Position Interlock	+VPEC12NP	1800339

© 2024 NOARK Electric

A25 Series Power Circuit Breakers

Appendix I

Required – Frame and Trip Unit

Select the catalog number segments from the list to create complete catalog numbers for the frame and for the trip unit.

	Description		Catalog Number Segment			
	Step 1 Frame Selection	4000A Disconnect Switch				
		3200A Disconnect Switch				
		4000A Breaker				
		3200A Breaker				
			A32	**A40**	**ASD32**	**ASD40**
Frame Selection	**Step 2** Interrupting Rating @635V	65kA	Q	Q	Q	Q
		85kA	R	R	R	R
		100kA	H	H	H	H
	Step 3 Poles	3 Pole	3	3	3	3
		4 Pole	4	4	4	4
	Step 4 Mounting	Fixed	F	F	F	F
		Drawout (Cassette included with Frame)	D	-	D	-
	Step 5 Terminal Orientation	Vertical	V	V	V	V
		Horizontal	H (2500A Max)	-	H (2500A Max)	-
	Step 6 Ampacity	800A	800	-	800	-
		1600A	1600		1600	
		2000A	2000		2000	
		2500A	2500		2500	
		3200A	3200		3200	
		4000A	-	4000	-	4000
Trip Unit Selection	**Step 1** Protection Type	LI	SU20	SU20	-	
		LSI	SU30	SU30		
		LSIG	SU40	SU40		
	Step 2 Display Type	LED - Basic	NM	NM		
		LCD - Ammeter	NA	NA		
		LCD - Harmonics	NH	NH		
	Step 3 Control Voltage	24 Vdc	A	A		
		110 - 130 Vac	C	C		
		200 - 240 Vac	D	D		

A complete breaker requires the specification of a frame and a trip unit. Select one catalog number segment from each step to create complete catalog numbers for each component. Disconnect switches do not have protection features and do not require a trip unit.

© 2024 NOARK Electric

A25 Series Power Circuit Breakers

Catalog Selection Guide

Required – Frame and Trip Unit

Select the catalog number segments from the list to create complete catalog numbers for the frame and for the trip unit.

	Description		Catalog Number Segment	
			A25	ASD25
Frame Selection	**Step 1** Frame Selection	2500A Disconnect Switch		
		2500A Breaker		
	Step 2 Interrupting Rating @635V	65kA	Q	Q
		85kA	R	R
		100kA	H	H
	Step 3 Poles	3 Pole	3	3
		4 Pole	4	4
	Step 4 Mounting	Fixed	F	F
		Drawout (Cassette included with Frame)	D	D
	Step 5 Terminal Orientation	Vertical	V	V
		Horizontal	H (2500A Max)	H (2500A Max)
	Step 6 Ampacity	800A	800	800
		1600A	1600	1600
		2000A	2000	2000
		2500A	2500	2500
		3200A	-	-
		4000A	-	-
Trip Unit Selection	**Step 1** Protection Type	LI	SU20	
		LSI	SU30	
		LSIG	SU40	
	Step 2 Display Type	LED - Basic	NM	
		LCD - Ammeter	NA	
		LCD - Harmonics	NH	
	Step 3 Control Voltage	24 Vdc	A	
		110 - 130 Vac	C	
		208 - 240 Vac	D	
		24 - 30 Vdc	A11D	
		24 - 30 Vdc	A11F	
		110 - 130 Vac	C11D	
		110 - 130 Vac	C11F	
		200 - 240 Vac	D11D	
		200 - 240 Vac	D11F	

A complete breaker requires the specification of a frame and a trip unit. Select one catalog number segment from each step to create complete catalog numbers for each component. Disconnect switches do not have protection features and do not require a trip unit.

© 2024 NOARK Electric

A25 Series Power Circuit Breakers

Catalog Selection Guide

Optional – Mechanical & Electrical Accessories:

Select the complete catalog number for any mechanical or electrical accessories required for the application

Description			Catalog Number Segment		
			A25	ASD25	
Mechanical Accessories Selection	Locking provisions	Lock - 1 Lock/1Key	KLK12N1	KLK12N1	Select from these accessories for locking provisions, barriers and interlocks
		Lock - 2 Locks/1Key	KLK12N2	KLK12N2	
		Lock - 3 Locks/2Keys	KLK12N3	KLK12N3	
		Padlock Hasp	VBP12N	VBP12N	
	Door Frame	Door Frame - Fixed	CDP11N	CDP11N	
		Door Frame - D/O	DDP11N	DDP11N	
	Phase Barrier	Phase Barrier - D/O - 3P	DPS12N2	DPS12N2	
		Phase Barrier - D/O - 4P	DPS12N3	DPS12N3	
		Phase Barrier - Fixed - 3P	PHS12N2	PHS12N2	
		Phase Barrier - Fixed - 4P	PHS12N3	PHS12N3	
		Mechanical Interlock (2 Breaker-Cable)	IPA12N	IPA12N	
	Interlocks	Door Interlock - D/O	VPEC11NP	VPEC11NP	
Electrical Accessories Selection	Rating Plug	Rating Plug - 800	IN12N08	-	One Rating Plug is included at the breaker's rated amps. Select a different one if the breaker is to be set at a lower amp rating than the frame.
		Rating Plug - 1600	IN12N16		
		Rating Plug - 2000	IN12N20		
		Rating Plug - 2500	IN12N25		
		Rating Plug - 3200	-		

© 2024 NOARK Electric

A25 Series Power Circuit Breakers

Electrical Accessories

Optional – Electrical Accessories:

Select the complete catalog number for any electrical accessories required for the application.

Description			Catalog Number Segment		
			A25	ASD25	
Electrical Operation Accessories Selection	Auxiliary Contacts	Auxiliary Contact - Fixed - 4NO & 4NC	AX11NF44	AX11NF44	Select from these accessories to make an electrically operated breaker: 1. Motor operator charges breaker springs automatically. 2. Shunt Trip opens the breaker from an outside electrical signal. 3. Undervoltage Release opens the breaker when the voltage supplied to it drops below a set point. 4. Closing Release closes the breaker from an outside electrical signal.
		Auxiliary Contact - Fixed - 4 Form C	AX11NF44C	AX11NF44C	
		Auxiliary Contact - Fixed - 6NO & 6NC	AX11NF66	AX11NF66	
		Auxiliary Contact - Fixed - 6 Form C	AX11NF66C	AX11NF66C	
		Auxiliary Contact - Drawout - 4NO & 4NC	AX11ND44	AX11ND44	
		Auxiliary Contact - Drawout - 4 Form C	AX11ND44C	AX11ND44C	
		Auxiliary Contact - Drawout - 6NO & 6NC	AX11ND66	AX11ND66	
		Auxiliary Contact - Drawout - 6 Form C	AX11ND66C	AX11ND66C	
	Motor Operator	Motor Operator - Fixed - 24-30Vdc	MD11NAF	MD11NAF	
		Motor Operator - Fixed - 48-60Vdc	MD11NBF	MD11NBF	
		Motor Operator - Fixed - 110-130Vac	MD11NCF	MD11NCF	
		Motor Operator - Fixed - 200-240Vac	MD11NDF	MD11NDF	
		Motor Operator - Fixed - 380-440Vac	MD11NEF	MD11NEF	
		Motor Operator - Drawout - 24-30Vdc	MD11NAD	MD11NAD	
		Motor Operator - Drawout - 48-60Vdc	MD11NBD	MD11NBD	
		Motor Operator - Drawout - 110-130Vac	MD11NCD	MD11NCD	
		Motor Operator - Drawout - 200-240Vac	MD11NDD	MD11NDD	
		Motor Operator - Drawout - 380-440Vac	MD11NED	MD11NED	
	Shunt Release	Shunt Release- Fixed - 24-30Vdc	SHT11NAF	SHT11NAF	
		Shunt Release - Fixed - 48-60Vdc	SHT11NBF	SHT11NBF	
		Shunt Release - Fixed - 110-130Vac	SHT11NCF	SHT11NCF	
		Shunt Release - Fixed - 200-240Vac	SHT11NDF	SHT11NDF	
		Shunt Release - Fixed - 380-440Vac	SHT11NEF	SHT11NEF	
		Shunt Release - Drawout - 24-30Vdc	SHT11NAD	SHT11NAD	
		Shunt Release - Drawout - 48-60Vdc	SHT11NBD	SHT11NBD	
		Shunt Release - Drawout - 110-130Vac	SHT11NCD	SHT11NCD	
		Shunt Release - Drawout - 200-240Vac	SHT11NDD	SHT11NDD	
		Shunt Release - Drawout - 380-440Vac	SHT11NED	SHT11NED	
	Undervoltage Release	Undervoltage Release - 24Vdc	UVT11NAF	UVT11NAD	
		Undervoltage Release - 48Vdc	UVT11NBF	UVT11NBD	
		Undervoltage Release - 110-130Vac	UVT11NCF	UVT11NCD	
		Undervoltage Release - 208-240Vac	UVT11NDF	UVT11NDD	
		Undervoltage Release - 380/415Vac	UVT11NEF	UVT11NED	
	Closing Release	Closing Release- Fixed - 24-30Vdc	XF11NAF	XF11NAF	
		Closing Release - Fixed - 48-60Vdc	XF11NBF	XF11NBF	
		Closing Release - Fixed - 110-130Vac	XF11NCF	XF11NCF	
		Closing Release - Fixed - 200-240Vac	XF11NDF	XF11NDF	
		Closing Release - Fixed - 380-440Vac	XF11NEF	XF11NEF	
		Closing Release - Drawout - 24-30Vdc	XF11NAD	XF11NAD	
		Closing Release - Drawout - 48-60Vdc	XF11NBD	XF11NBD	
		Closing Release - Drawout - 110-130Vac	XF11NCD	XF11NCD	
		Closing Release - Drawout - 200-240Vac	XF11NDD	XF11NDD	
		Closing Release - Drawout - 380-440Vac	XF11NED	XF11NED	
	Others	Breaker Position Contacts (Drawout Only)	EF11N	EF11N	Neutral Current Sensor is used only with LSIG (SU40) trip units installed. ELM10 and VCM10 are used only with Harmonics version Trip Unit installed.
		Ready-to-Close signal contact - Fixed	PF11NF	PF11NF	
		Ready-to-Close signal contact - Drawout	PF11ND	PF11ND	
		Neutral Current Sensor (SU40 TU Only)	NCT11N	-	
		Cable Type Neutral Current Sensor (SU40 TU Only)	-		
		Voltage Conversion Module (800Vac Systems only)			
		Energy Limiting Maintenance Switch	ELM10		

© 2024 NOARK Electric

A25 Series Power Circuit Breakers

Electrical Accessories

Optional - Mechanical Accessories:

Select the complete catalog number for any mechanical accessories required for the application.

Description			Catalog Number Segment		
			A25	ASD25	
Mechanical Accessories Selection	Locking Provisions	Lock - 1 Lock/1Key	KLK12N1	KLK12N1	Select from these accessories for locking provisions, phase barriers and interlocks
		Lock - 2 Locks/1Key	KLK12N2	KLK12N2	
		Lock - 3 Locks/2Keys	KLK12N3	KLK12N3	
		Padlock Hasp - Plastic	VBP12N	VBP12N	
		Padlock Hasp - Metal	VBP11NM	VBP11NM	
	Door Frame	Door Frame - Fixed	CDP11N	CDP11N	
		Door Frame - D/O	DDP11N	DDP11N	
	Phase Barrier	Phase Barrier - D/O - 3P	DPS12N2	DPS12N2	
		Phase Barrier - D/O - 4P	DPS12N3	DPS12N3	
		Phase Barrier - Fixed - 3P	PHS12N2	PHS12N2	
		Phase Barrier - Fixed - 4P	PHS12N3	PHS12N3	
	Interlocks	Mechanical Interlock (2 Breaker-Cable)	IPA12N	IPA12N	
		Door Interlock - D/O	VPEC12NP	VPEC12NP	

© 2024 NOARK Electric

A32 / A40 Series Power Circuit Breakers

Appendix I

Optional – Electrical Accessories:

Select the complete catalog number for any electrical accessories required for the application

Description			Catalog Number Segment				
			A32	A40	ASD32	ASD40	
Electrical Operation Accessories Selection	Rating Plug	Rating Plug - 800	IN12N08	Included with Trip Unit	-		One Rating Plug is included at the breaker's rated amps. Select a different one if the breaker is to be set at a lower amp rating than the frame
		Rating Plug - 1600	IN12N16				
		Rating Plug - 2000	IN12N20				
		Rating Plug - 2500	IN12N25				
		Rating Plug - 3200	IN12N32				
	Auxiliary Contacts	Auxiliary Contact - Fixed - 4NO & 4NC	AX12NF44	AX12NF44	AX12NF44	AX12NF44	Select from these accessories to make an electrically operated breaker: 1. Motor operator charges breaker springs automatically. 2. Shunt Trip opens the breaker from an outside electrical signal. 3. Undervoltage Release opens the breaker when the voltage supplied to it drops below a set point. 4. Closing Release closes the breaker from an outside electrical signal. Neutral Current Sensor is used only with LSIG (SU40) trip units installed. ELM10 and VCM10 are used only with Harmonics version Trip Unit installed.
		Auxiliary Contact - Fixed - 4 Form C	AX12NF44C	AX12NF44C	AX12NF44C	AX12NF44C	
		Auxiliary Contact - Fixed - 6NO & 6NC	AX12NF66	AX12NF66	AX12NF66	AX12NF66	
		Auxiliary Contact - Fixed - 6 Form C	AX12NF66C	AX12NF66C	AX12NF66C	AX12NF66C	
		Auxiliary Contact - Drawout - 4NO & 4NC	AX12ND44	-	AX12ND44	-	
		Auxiliary Contact - Drawout - 4 Form C	AX12ND44C		AX12ND44C		
		Auxiliary Contact - Drawout - 6NO & 6NC	AX12ND66		AX12ND66		
		Auxiliary Contact - Drawout - 6 Form C	AX12ND66C		AX12ND66C		
	Motor Operator	Motor Operator - 24-30Vdc	MD12NA	MD12NA	MD12NA	MD12NA	
		Motor Operator - 48-60Vdc	MD12NB	MD12NB	MD12NB	MD12NB	
		Motor Operator - 110-130Vac	MD12NC	MD12NC	MD12NC	MD12NC	
		Motor Operator - 200-240Vac	MD12ND	MD12ND	MD12ND	MD12ND	
		Motor Operator - 380-440Vac	MD12NE	MD12NE	MD12NE	MD12NE	
	Shunt Release	Shunt Trip Release - 24-30Vdc	SHT12NA	SHT12NA	SHT12NA	SHT12NA	
		Shunt Trip Release - 48-60Vdc	SHT12NB	SHT12NB	SHT12NB	SHT12NB	
		Shunt Trip Release - 110-130Vac	SHT12NC	SHT12NC	SHT12NC	SHT12NC	
		Shunt Trip Release - 200-240Vac	SHT12ND	SHT12ND	SHT12ND	SHT12ND	
		Shunt Trip Release - 380-440Vac	SHT12NE	SHT12NE	SHT12NE	SHT12NE	
	Undervoltage Release	Undervoltage Release - 24Vdc	UVT12NA	UVT12NA	UVT12NA	UVT12NA	
		Undervoltage Release - 48Vdc	UVT12NB	UVT12NB	UVT12NB	UVT12NB	
		Undervoltage Release - 110-130Vac	UVT12NC	UVT12NC	UVT12NC	UVT12NC	
		Undervoltage Release - 200-240Vac	UVT12ND	UVT12ND	UVT12ND	UVT12ND	
		Undervoltage Release - 380/440Vac	UVT12NE	UVT12NE	UVT12NE	UVT12NE	
	Closing Release	Closing Release - 24-30Vdc	XF12NA	XF12NA	XF12NA	XF12NA	
		Closing Release - 48-60Vdc	XF12NB	XF12NB	XF12NB	XF12NB	
		Closing Release - 110-130Vac	XF12NC	XF12NC	XF12NC	XF12NC	
		Closing Release - 200-240Vac	XF12ND	XF12ND	XF12ND	XF12ND	
		Closing Release - 380-440Vac	XF12NE	XF12NE	XF12NE	XF12NE	
	Others	Breaker Position Contacts (Drawout Only)	EF12N	N/A	EF12N	EF12N	Neutral Current Sensor is used only with LSIG (SU40) trip units installed. ELM10 and VCM10 are used only with Harmonics version Trip Unit installed.
		Ready-to-Close Signal Contact	PF12N	PF12N	PF12N	PF12N	
		Neutral Current Sensor (SU40 TU Only)	NCT12N	NCT12N	-		
		Cable Type Neutral Current Sensor (SU40 TU Only)	-	RCT-1800			
		Voltage Conversion Module (800Vac Systems only)		VCM10			
		Energy Limiting Maintenance Switch	ELM10	ELM10			

© 2024 NOARK Electric

A32 / A40 Series Power Circuit Breakers

Appendix I

Optional – Electrical Accessories:
Select the complete catalog number for any electrical accessories required for the application

Description			Catalog Number Segment			
			A32	A40	ASD32	ASD40
Mechanical Accessories Selection	Locking provisions	Lock - 1 Lock/1Key	LK12N1	KLK12N1	KLK12N1	KLK12N1
		Lock - 2 Locks/1Key	KLK12N2	KLK12N2	KLK12N2	KLK12N2
		Lock - 3 Locks/2Keys	KLK12N3	KLK12N3	KLK12N3	KLK12N3
		Padlock Hasp - Plastic	VBP12N	VBP12N	VBP12N	VBP12N
		Padlock Hasp - Metal	VBP12NM	VBP12NM	VBP12NM	VBP12NM
	Door Frame	Door Frame - Fixed	CDP12N	CDP12N	CDP12N	CDP12N
		Door Frame - D/O	DDP12N	-	DDP12N	-
	Phase Barrier	Phase Barrier - D/O - 3P (800A - 2500A)	DPS12N2	-	DPS12N2	-
		Phase Barrier - D/O - 4P (800A - 2500A)	DPS12N3		DPS12N3	
		Phase Barrier - D/O - 3P (3200A)	DPS12N4		DPS12N4	
		Phase Barrier - D/O - 4P (3200A)	DPS12N6		DPS12N6	
		Phase Barrier - Fixed - 3P (800A - 2500A)	PHS12N2		PHS12N2	
		Phase Barrier - Fixed - 4P (800A - 2500A)	PHS12N3		PHS12N3	
		Phase Barrier - Fixed - 3P (3200A)	PHS12N4		PHS12N4	
		Phase Barrier - Fixed - 4P (3200A)	PHS12N6		PHS12N6	
		Phase Barrier - Fixed - 3P (4000A)	-	PHS12N4	-	PHS12N4
		Phase Barrier - Fixed - 4P (4000A)		PHS12N6		PHS12N6
	Interlocks	Mechanical Interlock (2 Breaker-Cable)	IPA12N	IPA12N	IPA12N	IPA12N
		Door Interlock - D/O	VPEC12NP	-	VPEC12NP	-

Select from these accessories for locking provisions, phase barriers and interlocks

© 2024 NOARK Electric

A32 Series Power Circuit Breakers

Appendix II

Optional – Electrical Accessories:

Select the complete catalog number for any electrical accessories required for the application.

Description			Catalog Number Segment		
			A32	ASD32	
Electrical Operation Accessories Selection	Auxiliary Contacts	Auxiliary Contact - Fixed - 4NO & 4NC	AX12NF44	AX12NF44	Select from these accessories to make an electrically operated breaker: 1. Motor operator charges breaker springs automatically. 2. Shunt Trip opens the breaker from an outside electrical signal. 3. Undervoltage Release opens the breaker when the voltage supplied to it drops below a set point. 4. Closing Release closes the breaker from an outside electrical signal.
		Auxiliary Contact - Fixed - 4 Form C	AX12NF44C	AX12NF44C	
		Auxiliary Contact - Fixed - 6NO & 6NC	AX12NF66	AX12NF66	
		Auxiliary Contact - Fixed - 6 Form C	AX12NF66C	AX12NF66C	
		Auxiliary Contact - Drawout - 4NO & 4NC	AX12ND44	AX12ND44	
		Auxiliary Contact - Drawout - 4 Form C	AX12ND44C	AX12ND44C	
		Auxiliary Contact - Drawout - 6NO & 6NC	AX12ND66	AX12ND66	
		Auxiliary Contact - Drawout - 6 Form C	AX12ND66C	AX12ND66C	
	Motor Operator	Motor Operator - 24-30Vdc	MD12NA	MD12NA	
		Motor Operator - 48-60Vdc	MD12NB	MD12NB	
		Motor Operator - 110-130Vac	MD12NC	MD12NC	
		Motor Operator - 200-240Vac	MD12ND	MD12ND	
		Motor Operator - 380-440Vac	MD12NE	MD12NE	
	Shunt Release	Shunt Trip Release - 24-30Vdc	SHT12NA	SHT12NA	
		Shunt Trip Release - 48-60Vdc	SHT12NB	SHT12NB	
		Shunt Trip Release - 110-130Vac	SHT12NC	SHT12NC	
		Shunt Trip Release - 200-240Vac	SHT12ND	SHT12ND	
		Shunt Trip Release - 380-440Vac	SHT12NE	SHT12NE	
	Undervoltage Release	Undervoltage Release - 24Vdc	UVT12NA	UVT12NA	
		Undervoltage Release - 48Vdc	UVT12NB	UVT12NB	
		Undervoltage Release - 110-130Vac	UVT12NC	UVT12NC	
		Undervoltage Release - 200-240Vac	UVT12ND	UVT12ND	
		Undervoltage Release - 380/440Vac	UVT12NE	UVT12NE	
	Closing Release	Closing Release - 24-30Vdc	XF12NA	XF12NA	
		Closing Release - 48-60Vdc	XF12NB	XF12NB	
		Closing Release - 110-130Vac	XF12NC	XF12NC	
		Closing Release - 200-240Vac	XF12ND	XF12ND	
		Closing Release - 380-440Vac	XF12NE	XF12NE	
	Others	Breaker Position Contacts (Drawout Only)	EF12N	EF12N	Neutral Current Sensor is used only with LSIG (SU40) trip units installed. ELM10 and VCM10 are used only with Harmonics version Trip Unit installed.
		Ready-to-Close signal contact	PF12N	PF12N	
		Neutral Current Sensor (SU40 TU Only)	NCT12N	-	
		Cable Type Neutral Current Sensor (SU40 TU Only)	-		
		Voltage Conversion Module (800Vac Systems only)			
		Energy Limiting Maintenance Switch	ELM10		

© 2024 NOARK Electric

A32 Series Power Circuit Breakers

Appendix II

Optional - Mechanical Accessories:

Select the complete catalog number for any mechanical accessories required for the application.

Description			Catalog Number Segment	
			A32	ASD32
Mechanical Accessories Selection	Locking Provisions	Lock - 1 Lock/1Key	KLK12N1	KLK12N1
		Lock - 2 Locks/1Key	KLK12N2	KLK12N2
		Lock - 3 Locks/2Keys	KLK12N3	KLK12N3
		Padlock Hasp - Plastic	VBP12N	VBP12N
		Padlock Hasp - Metal	VBP12NM	VBP12NM
	Door Frame	Door Frame - Fixed	CDP12N	CDP12N
		Door Frame - D/O	DDP12N	DDP12N
	Phase Barrier	Phase Barrier - D/O - 3P (800A - 2500A)	DPS12N2	DPS12N2
		Phase Barrier - D/O - 4P (800A - 2500A)	DPS12N3	DPS12N3
		Phase Barrier - D/O - 3P (3200A)	DPS12N4	DPS12N4
		Phase Barrier - D/O - 4P (3200A)	DPS12N6	DPS12N6
		Phase Barrier - Fixed - 3P (800A - 2500A)	PHS12N2	PHS12N2
		Phase Barrier - Fixed - 4P (800A - 2500A)	PHS12N3	PHS12N3
		Phase Barrier - Fixed - 3P (3200A)	PHS12N4	PHS12N4
		Phase Barrier - Fixed - 4P (3200A)	PHS12N6	PHS12N6
		Phase Barrier - Fixed - 3P (4000A)	-	-
		Phase Barrier - Fixed - 4P (4000A)		
	Interlocks	Mechanical Interlock (2 Breaker-Cable)	IPA12N	IPA12N
		Door Interlock - D/O	VPEC12NP	VPEC12NP

Select from these accessories for locking provisions, phase barriers and interlocks

© 2024 NOARK Electric

A40 Series Power Circuit Breakers

Appendix III

Required – Frame and Trip Unit

Select the catalog number segments from the list to create complete catalog numbers for the frame and for the trip unit.

	Description		Catalog Number Segment	
			4000A Disconnect Switch	4000A Breaker
	Step 1 Frame Type		**A40**	**ASD40**
Frame Selection	**Step 2** Interrupting Rating @635V	65kA	Q	Q
		85kA	R	R
		100kA	H	H
	Step 3 Poles	3 Pole	3	3
		4 Pole	4	4
	Step 4 Mounting	Fixed	F	F
		Drawout (Cassette included with Frame)	–	–
	Step 5 Terminal Orientation	Vertical	V	V
		Horizontal	–	–
	Step 6 Ampacity	800A	–	–
		1600A		
		2000A		
		2500A		
		3200A		
		4000A	4000	4000
Trip Unit Selection	**Step 1** Protection Type	LI	SU20	
		LSI	SU20	
		LSIG	SU30	
	Step 2 Display Type	LED - Basic	SU40	
		LCD - Ammeter	NA	
		LCD - Harmonics	NH	
	Step 3 Control Voltage	24 Vdc	A	
		110 - 130 Vac	C	
		200 - 240 Vac	D	

A complete breaker requires the specification of a frame and a trip unit. Select one catalog number segment from each step to create complete catalog numbers for each component. Disconnect switches do not have protection features and do not require a trip unit.

© 2024 NOARK Electric

A40 Series Power Circuit Breakers

Appendix III

Optional – Mechanical & Electrical Accessories:
Select the complete catalog number for any mechanical or electrical accessories required for the application

Description			Catalog Number Segment		
			A40	ASD40	
Mechanical Accessories Selection	Locking provisions	Lock - 1 Lock/1Key	KLK12N1	KLK12N1	Select from these accessories for locking provisions, barriers and interlocks
		Lock - 2 Locks/1Key	KLK12N2	KLK12N2	
		Lock - 3 Locks/2Keys	KLK12N3	KLK12N3	
		Padlock Hasp	VBP12N	VBP12N	
	Door Frame	Door Frame - Fixed	CDP12N	CDP12N	
		Door Frame - D/O	DDP12N	DDP12N	
	Phase Barrier	Phase Barrier - Fixed - 3P	PHS12N4	PHS12N4	
		Phase Barrier - Fixed - 4P	PHS12N6	PHS12N6	
	Interlocks	Mechanical Interlock (2 Breaker-Cable)	IPA12N	IPA12N	
		Door Interlock - D/O	–	–	
Electrical Accessories Selection	Rating Plug	Rating Plug - 800	Included with Trip Unit	–	One Rating Plug is included at the breaker's rated amps. Select a different one if the breaker is to be set at a lower amp rating than the frame.
		Rating Plug - 1600			
		Rating Plug - 2000			
		Rating Plug - 2500			
		Rating Plug - 3200			

© 2024 NOARK Electric

A40 Series Power Circuit Breakers

Appendix III

Optional – Electrical Accessories:
Select the complete catalog number for any electrical accessories required for the application.

Description			Catalog Number Segment	
			A40	ASD40
Electrical Operation Accessories Selection	Auxiliary Contacts	Auxiliary Contact - Fixed - 4NO & 4NC	AX12NF44	AX12NF44
		Auxiliary Contact - Fixed - 4 Form C	AX12NF44C	AX12NF44C
		Auxiliary Contact - Fixed - 6NO & 6NC	AX12NF66	AX12NF66
		Auxiliary Contact - Fixed - 6 Form C	AX12NF66C	AX12NF66C
		Auxiliary Contact - Drawout - 4NO & 4NC	–	–
		Auxiliary Contact - Drawout - 4 Form C		
		Auxiliary Contact - Drawout - 6NO & 6NC		
		Auxiliary Contact - Drawout - 6 Form C		
	Motor Operator	Motor Operator - 24-30Vdc	MD12NA	MD12NA
		Motor Operator - 48-60Vdc	MD12NB	MD12NB
		Motor Operator - 110-130Vac	MD12NC	MD12NC
		Motor Operator - 200-240Vac	MD12ND	MD12ND
		Motor Operator - 380-440Vac	MD12NE	MD12NE
	Shunt Release	Shunt Trip Release - 24-30Vdc	SHT12NA	SHT12NA
		Shunt Trip Release - 48-60Vdc	SHT12NB	SHT12NB
		Shunt Trip Release - 110-130Vac	SHT12NC	SHT12NC
		Shunt Trip Release - 200-240Vac	SHT12ND	SHT12ND
		Shunt Trip Release - 380-440Vac	SHT12NE	SHT12NE
	Undervoltage Release	Undervoltage Release - 24Vdc	UVT12NA	UVT12NA
		Undervoltage Release - 48Vdc	UVT12NB	UVT12NB
		Undervoltage Release - 110-130Vac	UVT12NC	UVT12NC
		Undervoltage Release - 200-240Vac	UVT12ND	UVT12ND
		Undervoltage Release - 380/440Vac	UVT12NE	UVT12NE
	Closing Release	Closing Release - 24-30Vdc	XF12NA	XF12NA
		Closing Release - 48-60Vdc	XF12NB	XF12NB
		Closing Release - 110-130Vac	XF12NC	XF12NC
		Closing Release - 200-240Vac	XF12ND	XF12ND
		Closing Release - 380-440Vac	XF12NE	XF12NE
	Others	Breaker Position Contacts (Drawout Only)	N/A	EF12N
		Ready-to-Close signal contact	PF12N	PF12N
		Neutral Current Sensor (SU40 TU Only)	NCT12N	–
		Cable Type Neutral Current Sensor (SU40 TU Only)	RCT-1800	
		Voltage Conversion Module (800Vac Systems only)	VCM10	
		Energy Limiting Maintenance Switch	ELM10	

Select from these accessories to make an electrically operated breaker:

1. Motor operator charges breaker springs automatically.

2. Shunt Trip opens the breaker from an outside electrical signal.

3. Undervoltage Release opens the breaker when the voltage supplied to it drops below a set point.

4. Closing Release closes the breaker from an outside electrical signal.

Neutral Current Sensor is used only with LSIG (SU40) trip units installed. ELM10 and VCM10 are used only with Harmonics version Trip Unit installed.

© 2024 NOARK Electric

A40 Series Power Circuit Breakers

Appendix III

Optional – Mechanical & Electrical Accessories:

Select the complete catalog number for any mechanical or electrical accessories required for the application

Description			Catalog Number Segment		
			A40	ASD40	
Mechanical Accessories Selection	Locking provisions	Lock - 1 Lock/1Key	KLK12N1	KLK12N1	Select from these accessories for locking provisions, barriers and interlocks
		Lock - 2 Locks/1Key	KLK12N2	KLK12N2	
		Lock - 3 Locks/2Keys	KLK12N3	KLK12N3	
		Padlock Hasp – Plastic	VBP12N	VBP12N	
		Padlock Hasp –Metal	VBP12NM	VBP12NM	
	Door Frame	Door Frame - Fixed	CDP12N	CDP12N	
	Phase Barrier	Phase Barrier - D/O - 3P (800A - 2500A)			
		Phase Barrier - D/O - 4P (800A - 2500A)			
		Phase Barrier - D/O - 3P (3200A)			
		Phase Barrier - D/O - 4P (3200A)			
		Phase Barrier - Fixed - 3P (800A - 2500A)			
		Phase Barrier - Fixed - 4P (800A - 2500A)			
		Phase Barrier - Fixed - 3P (3200A)			
		Phase Barrier - Fixed - 4P (3200A)			
		Phase Barrier - Fixed - 3P (4000A)			
		Phase Barrier - Fixed - 4P (4000A)	PHS12N4	PHS12N4	
	Interlocks	Mechanical Interlock (2 Breaker-Cable)	PHS12N6	PHS12N6	
		Door Interlock - D/O	IPA12N	IPA12N	
			–	–	

© 2024 NOARK Electric

NOARK Electric USA
2188 Pomona Blvd.
Pomona, CA 91768
(626) 330-7007
nasales@noark-electric.com

NOARK Electric Canada
975 Bleams Rd. Unit 3
Kitchener, ON N2E 3Z5
519-790-0605
casales@noark-electric.com

na.noark-electric.com

Note: NOARK Electric reserves the right to make technical changes or modify the contents of this document without prior notice. With regard to purchase orders, the agreed particulars shall prevail. NOARK Electric nor any of its affiliates or subsidiaries shall be responsible or liable for potential errors or possible lack of information in this document. NOARK Electric reserves all rights in this document and in the subject matter and illustrations contained therein. Any reproduction, disclosure to third parties or utilization of its contents – in whole or in parts – is forbidden without prior written consent of NOARK Electric.

2024 NOARK Electric • All Rights Reserved

CPPCB202410NA