NOARK A SERIES

Conform to UL1066 & ANSI C37.13 & CSA C22.2 NO.31

User Manual

ZA202406UL

Noark

Contents

Installation Manual

1.Overview 01
2.Product Parameters.....02
3.Environmental Conditions.....05
4.Package Identification.....06
5.Storage.....07
6.Unpacking 08
7.Installation,Debugging and Operation 10
8.Handling.....16
9.Installation Dimensionss.....21
10.Terminal Adjustment 61
11.Accessories.....64
12.Control Circuit Wiring 79

Trip Unit Operation Instruction

13.Trip Unit.....87
14.Profile of SU 88
15.Main Menus.....94
16.Menu 95
17.LED Display Menu and Function Overview.....97
18.Trip Curves 99

Danger and Warning

This device should be installed, operated, serviced and maintained only by professional personnel.

Noark Electric is not responsible for any consequences caused by non-compliance with this the manual.

- ★ After unpacking the product, check for any damage and the integrity of other items.
- ★ Do not install the product in inflammable, explosive, humid and condensing environment.
- ★ Do not install the product at places where gas medium can cause metal corrosion and insulation damage.
- ★ Connect the product to the proper power supply and standard wires.
- ★ Leave sufficient space and safe distance around the product.
- ★ Do not touch the conductive parts during operation.
- ★ Disconnect all the power sources during installation and maintenance.
- ★ Failure to follow the above instructions may result in equipment damage, personal injury or even death.

Environmental Protection

To protect environment, this product and its components should be disposed properly as industrial waste upon end of life; or delivered to recycling plant who will dismantle and recycle the product according to relevant national regulations.

Standards and File Number

- ★ UL 1066
- ★ ANSI C37.13
- ★ ANSI C37.16
- ★ ANSI C37.17
- ★ ANSI C37.50
- ★ CSA C22.2 NO.31
- ★ UL file number: E502732

Overview

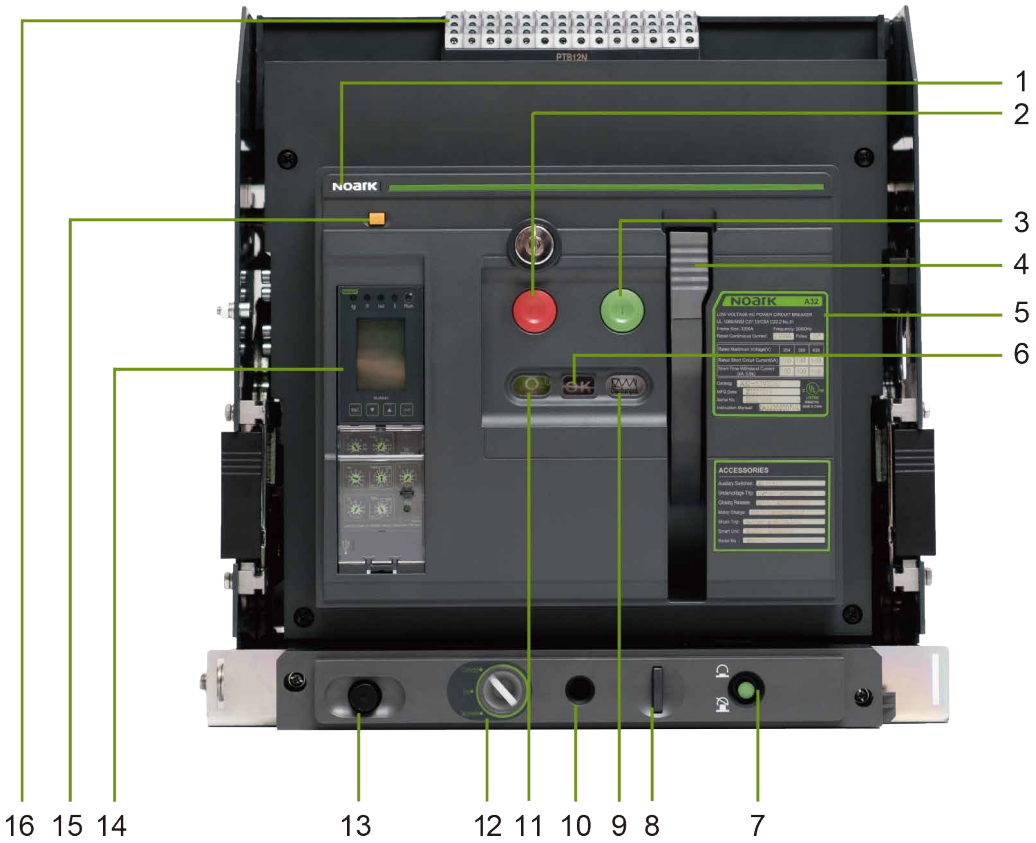

1. Brand
2. Opening push-button (O)
3. Closing push-button (I)
4. Manual spring charge handle
5. Nameplate
6. Ready to close indicator

   a) Ready
   b) Not ready

7. Cassette position lock(manually reset after injection)
8. Padlock
9. Spring charged/discharged indicator

   a) Spring charged
   b) Spring discharged

10. Rotary handle operation hole
11. Main contact position indicator

    a) Opening
    b) Closing

12. Indicator for Disconnect, Test, Connect position
13. Rotary handle
14. Trip Unit
15. Trip reset button
16. Control circuit wiring terminals

Product Parameters

Power Circuit Breakers			A25Q	A25R	A25H
Pole			3P/4P		
Mounting type			Fixed/Drawout		
Rated current (A)			Fixed：600/800/1200/1600/2000/2500 Drawout：600/800/1200/1600/2000		
Rated maximum voltage(V)			254/508/635/847		
Frequency (Hz)			50/60		
Interrupting rating at rated maximum voltage (kA)		254V	65	85	100
		508V	65	85	100
		635V	65	75	85
		847V	65	75	85
Short time withstand current (kA)		254V	65	75	85
		508V	65	75	85
		635V	65	75	85
		847V	65	75	85
Operating time (ms)		Open	≤30		
		Close	≤70		
Life cycle (time)	Mechanical	Without maintenance	10000	10000	10000
	Electrical	Without maintenance (635V)	6000	6000	6000
		Without maintenance (847V)	3000	3000	3000
Overall dimensions H×W×D (in/mm)	Drawout	3P	18.11×14.06×16.95(460×357×430.5)		
		4P	18.11×17.80×16.95(460×452×430.5)		
	Fixed	3P	14.49×12.52×12.05(368×318×306)		
		4P	14.49×16.26×12.05(368×413×306)		
Enclosure dimensions H×W×D (in/mm)	Drawout	3P	20.87x17.72x18.31(530x450x465)		
		4P	20.87x21.46x18.31(530x545x465)		

Non-Automatic Switches			ASD25Q	ASD25R	ASD25H
Pole			3P/4P		
Mounting type			Fixed/Drawout		
Rated current (A)			Fixed：600/800/1200/1600/2000/2500 Drawout：600/800/1200/1600/2000		
Rated maximum voltage(V)			254/508/635/847		
Frequency (Hz)			50/60		
Short time withstand current (kA)		254V	65	75	85
		508V	65	75	85
		635V	65	75	85
		847V	65	75	85
Operating time (ms)		Open	≤30		
		Close	≤70		
Life cycle (time)	Mechanical	Without maintenance	10000	10000	10000
	Electrical	Without maintenance(635V)	6000	6000	6000
		Without maintenance(847V)	3000	3000	3000
Overall dimensions H×W×D (in/mm)	Drawout	3P	18.11×14.06×16.95(460×357×430.5)		
		4P	18.11×17.80×16.95(460×452×430.5)		
	Fixed	3P	14.49×12.52×12.05(368×318×306)		
		4P	14.49×16.26×12.05(368×413×306)		
Enclosure dimensions H×W×D (in/mm)	Drawout	3P	20.87x17.72x18.31(530x450x465)		
		4P	20.87x21.46x18.31(530x545x465)		

Product Parameters

A32Q	A32R	A32H	A40Q	A40R	A40H
3P/4P					
Fixed/Drawout			Fixed		
800/1600/2000/2500/3200			4000		
254/508/635			254/508/635/847		
50/60					
65	85	100	65	85	100
65	85	100	65	85	100
65	85	100	65	85	100
/	/	/	65	75	85
65	85	100	65	85	100
65	85	100	65	85	100
65	85	100	65	85	100
/	/	/	65	75	85
≤30					
≤70					
10000	10000	10000	10000	10000	10000
6000	6000	6000	4000	4000	4000
/	/	/	3000	3000	3000
16.93×17.28×17.17(430×439×436)			/		
16.93×21.81×17.17(430×554×436)			/		
15.43×14.92×12.22(392×379×310.5)			15.31×14.92×12.22(389×379×310.5)		
15.43×19.45×12.22(392×494×310.5)			15.31×19.45×12.22(389×494×310.5)		
21.65×23.62×18.11(550×520×460) Ventilation Area Top: 9092mm² Bottom: 9092mm²			/		
21.65×25×18.11(550×635×460) Ventilation Area Top: 11963mm² Bottom: 11963mm²			/		

ASD32Q	ASD32R	ASD32H	ASD40Q	ASD40R	ASD40H
3P/4P					
Fixed/Drawout			Fixed		
800/1600/2000/2500/3200			4000		
254/508/635			254/508/635/847		
50/60					
65	85	100	65	85	100
65	85	100	65	85	100
65	85	100	65	85	100
/	/	/	65	75	85
≤30					
≤70					
10000	10000	10000	10000	10000	10000
6000	6000	6000	4000	4000	4000
/	/	/	3000	3000	3000
16.93×17.28×17.17(430×439×436)			/		
16.93×21.81×17.17(430×554×436)			/		
15.43×14.92×12.22(392×379×310.5)			15.31×14.92×12.22(389×379×310.5)		
15.43×19.45×12.22(392×494×310.5)			15.31×19.45×12.22(389×494×310.5)		
21.65×23.62×18.11(550×520×460) Ventilation Area Top: 9092mm² Bottom: 9092mm²			/		
21.65×25×18.11(550×635×460) Ventilation Area Top: 11963mm² Bottom: 11963mm²			/		

Product Parameters

Power Consumption			
Model	**Mounting Type**	**Rated Current /A**	**Power Consumption / W**
A25/ASD25	Drawout	600	38
		800	68
		1200	150
		1600	245
		2000	385
	Fixed	600	28
		800	50
		1200	112
		1600	185
		2000	290
		2500	375
A32/ASD32	Drawout	800	62
		1600	245
		2000	335
		2500	525
		3200	800
	Fixed	800	42
		1600	170
		2000	240
		2500	375
		3200	615
A40/ASD40	Fixed	4000	960

Environmental Conditions

Ambient Temperature

A Series Power Circuit Breakers can operate in the following environmental conditions:

With M Trip Unit: -40℃ ~ 70℃;

With A/H Trip Unit: -20℃ ~ 70℃;

A Series Power Circuit Breakers can operate at higher temperatures than the reference temperature 40℃,in this case,the derating coefficients shown in the table must be applied.

Model	Rated Current (A)	Temperature(℃)						
		<40	45	50	55	60	65	70
A25/ASD25	600	100%	100%	100%	100%	100%	100%	100%
	800	100%	100%	100%	100%	100%	100%	100%
	1200	100%	100%	100%	100%	100%	95%	90%
	1600	100%	100%	100%	95%	92%	88%	85%
	2000	100%	100%	100%	95%	90%	85%	80%
	2500	100%	95%	90%	80%	75%	70%	65%
A32/ASD32	800	100%	100%	100%	100%	100%	100%	100%
	1600	100%	100%	100%	100%	100%	100%	100%
	2000	100%	100%	100%	100%	100%	100%	93%
	2500	100%	95%	92%	88%	83%	80%	75%
	3200	100%	95%	92%	88%	83%	80%	75%
A40/ASD40	4000	100%	90%	85%	80%	75%	70%	65%

Altitude

A Series Power Circuit Breakers do not undergo changes in rated performance up to 2000m.Beyond this altitude, the derating coefficients shown in the table must be applied.

	Altitude(m)			
	<2000	2600	3900	4900
Rated Voltage(V)	1xUe	0.95xUe	0.8xUe	0.7xUe
Rated Current(A)	1xIn	0.99xIn	0.96xIn	0.94xIn

Humidity

The relative humidity does not exceed 85% at 40℃, the monthly average maximum of relative humidity in the wettest month does not exceed 90%.

The effect of surface condensation caused by temperature changes on product performance should be taken into consideration.

Package

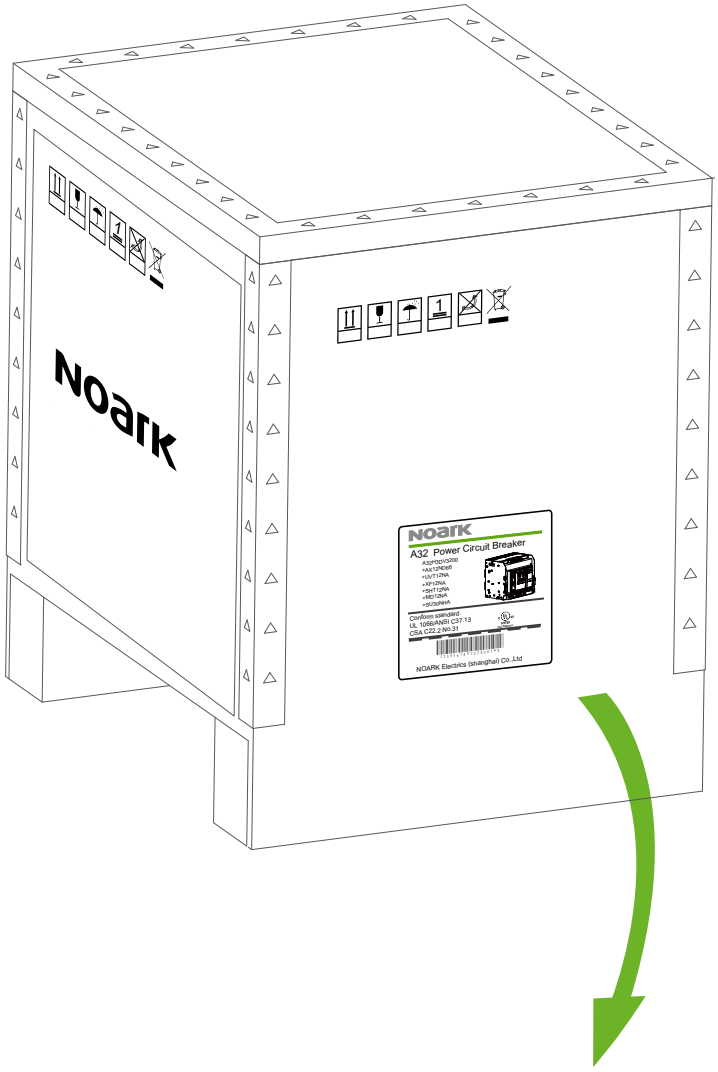
Noark
Noark
A32 Power Circuit Breaker
NOARK Electrics (shanghai) Co.,Ltd

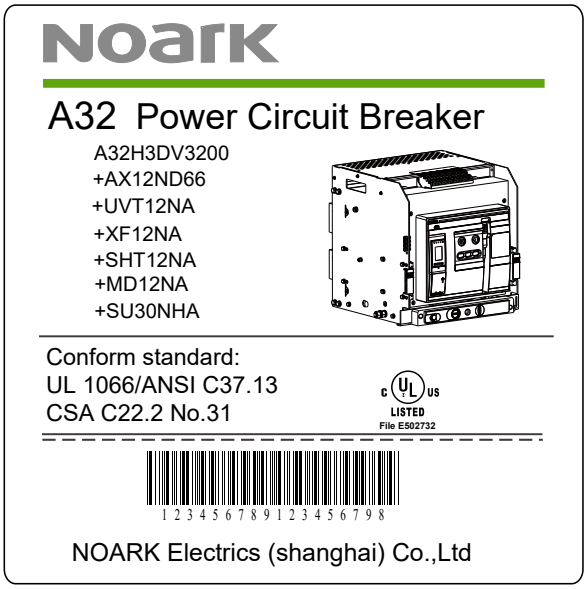
Noark
A32 Power Circuit Breaker
A32H3DV3200
+AX12ND66
+UVT12NA
+XF12NA
+SHT12NA
+MD12NA
+SU30NHA
Conform standard:
UL 1066/ANSI C37.13
CSA C22.2 No.31
c UL us
LISTED
File E502732
1 2 3 4 5 6 7 8 9 1 2 3 4 5 6 7 9 8
NOARK Electrics (shanghai) Co.,Ltd

Storage

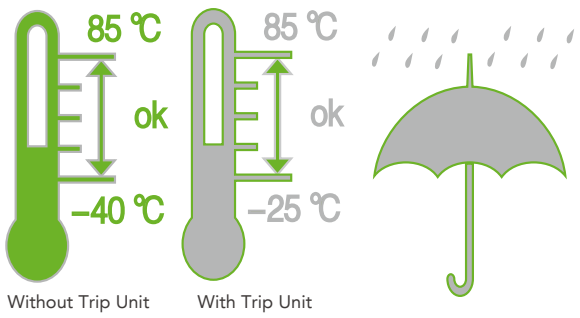

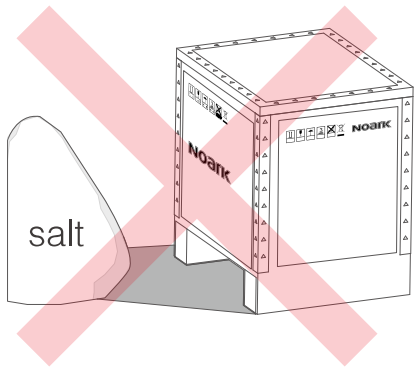

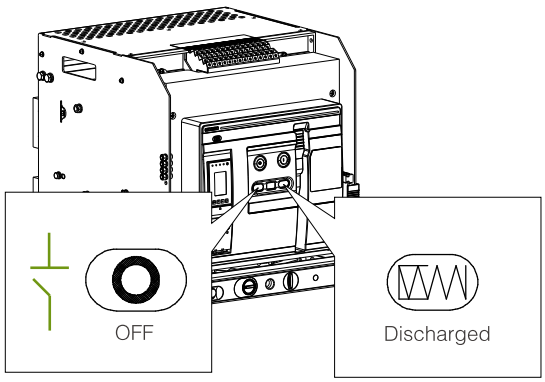

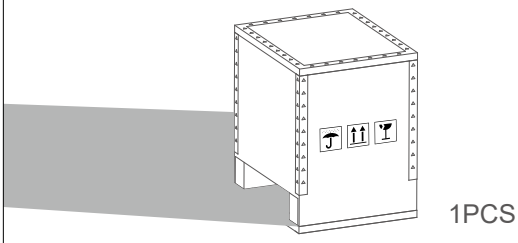

With Plastic Bag

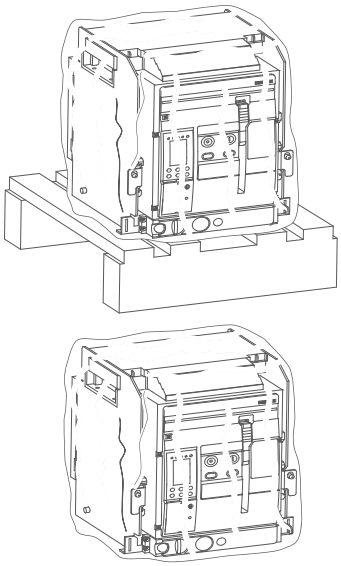

OK

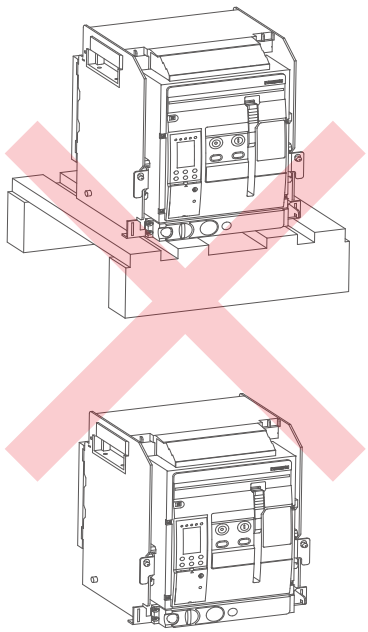

Unpacking

Tools	5/8(15.9) Angled Socket Wrence	Screwdriver
Picture		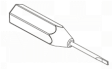

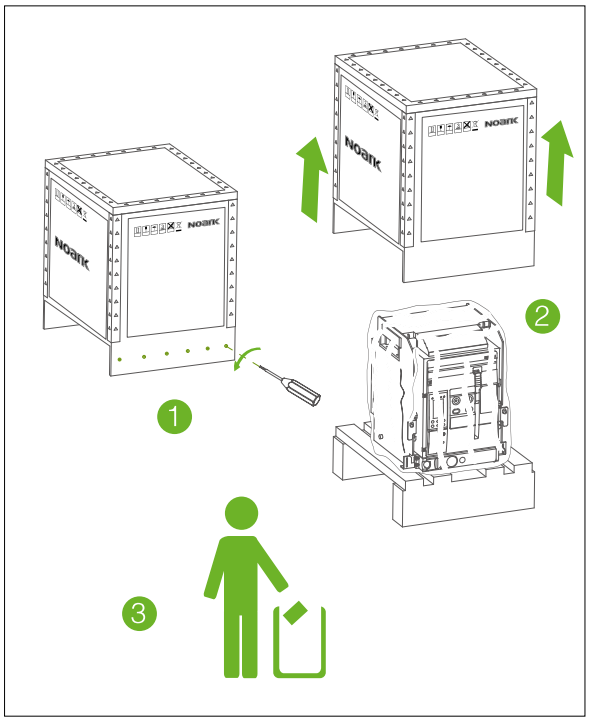

Nameplate example

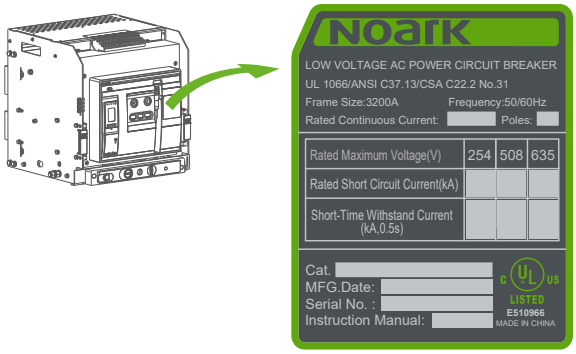

Drawout

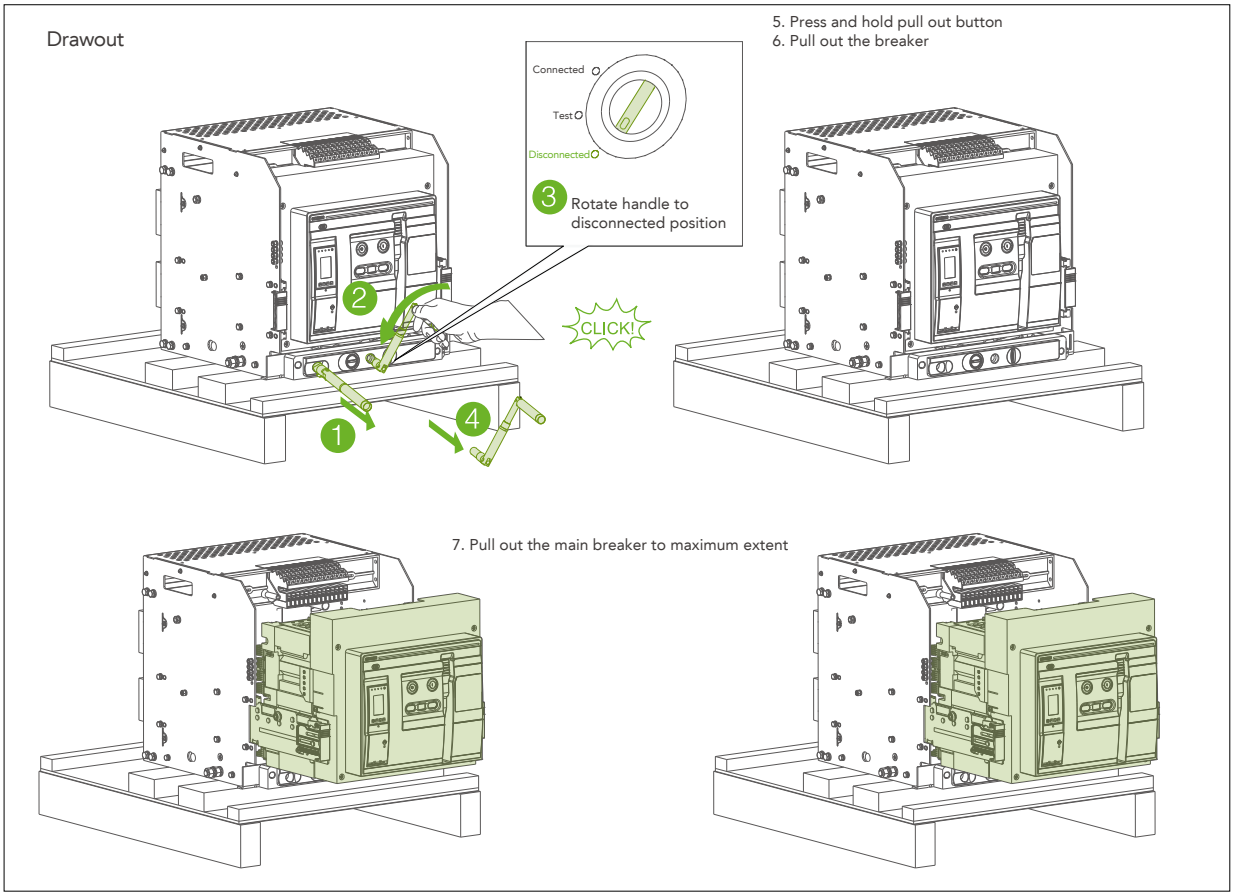

Unpacking

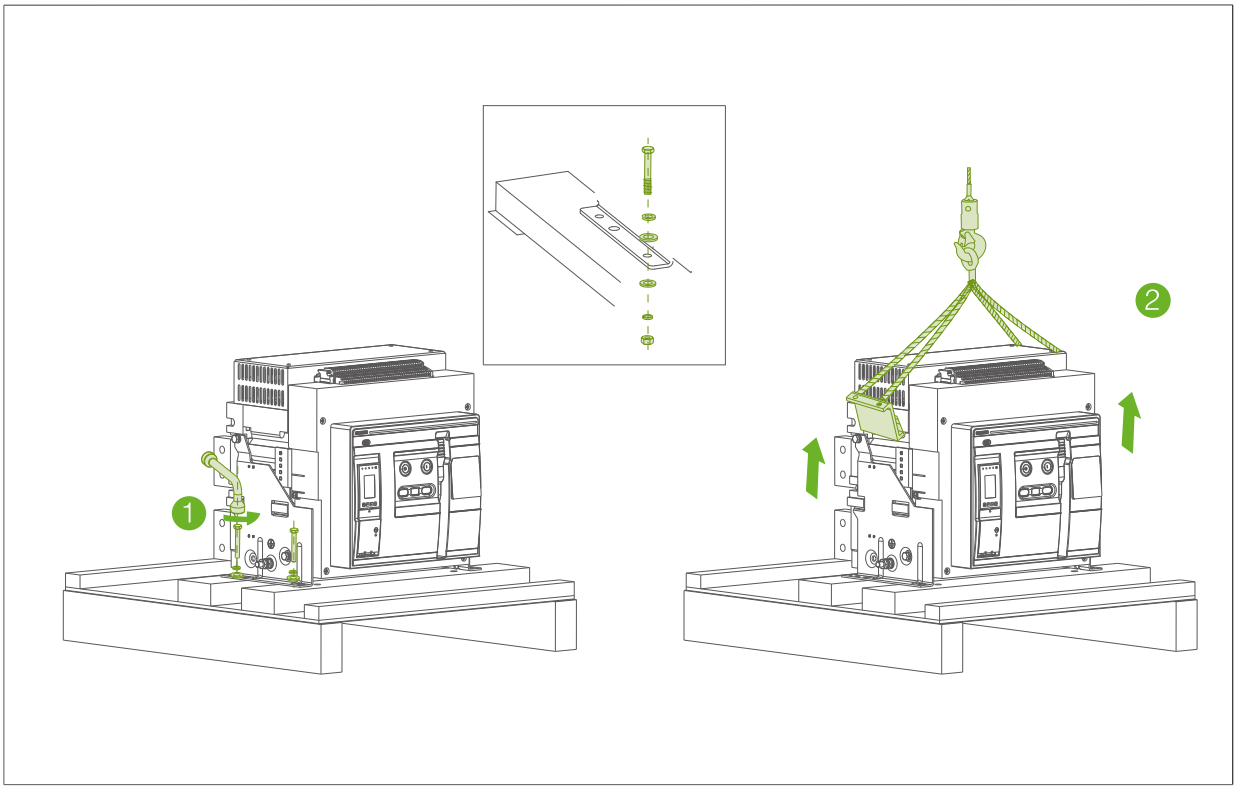

Installation,Debugging and Operation

1 General check and technical specification for installation

1.1 Check before installation

a. Please check if the parameters on breaker match the data of the order.

b. It is mandatory to know the instruction well before installation, operation, maintenance and repair. If not, wrong operation may happen and it may bring safety issues.

1.2 Preparation before installation

a. Unpacking according to the instruction and no violent operation.

b. Remove the breaker from the sole plate of package. For the **Drawout type**, rotate out the breaker according to Fig. 2 after disassembling the sole plate and clean up the dirty inside the cassette.

c. Measuring the insulation resistor with the megger of 500V under the environment of specific temperature(20±5℃) and relative humidity(50-70%). The value of insulation resistor should be less than 20MΩ, if exceed, drying is mandatory.

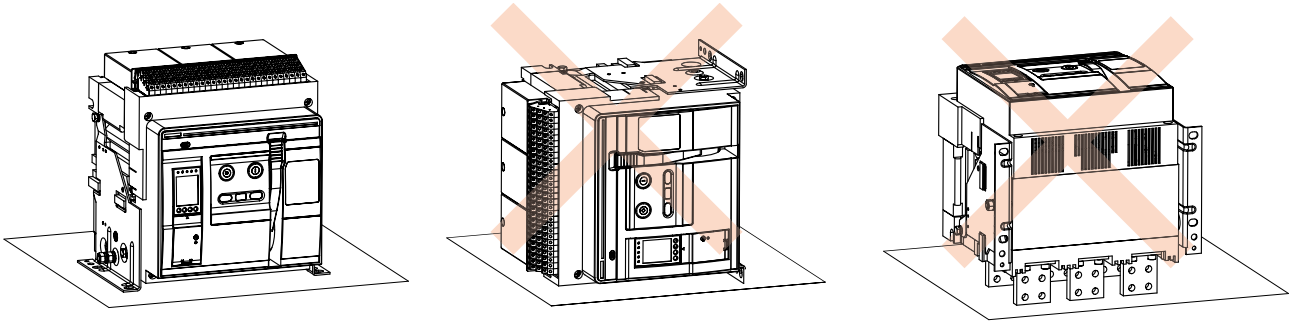

Figure 1 Correct placement of circuit breaker

2 Installation of drawout breaker

2.1 Rotate out the breaker

① Take the rotary handle out.

② Insert the handle into the hole and rotate anticlockwise. The breaker will be moved from connected position to the disconnected position.

③ Remove the handle and start to pull the breaker out. Pay attention to the topple and fall since the center of the gravity move ahead.

④ Lift up the breaker and push the rails back.

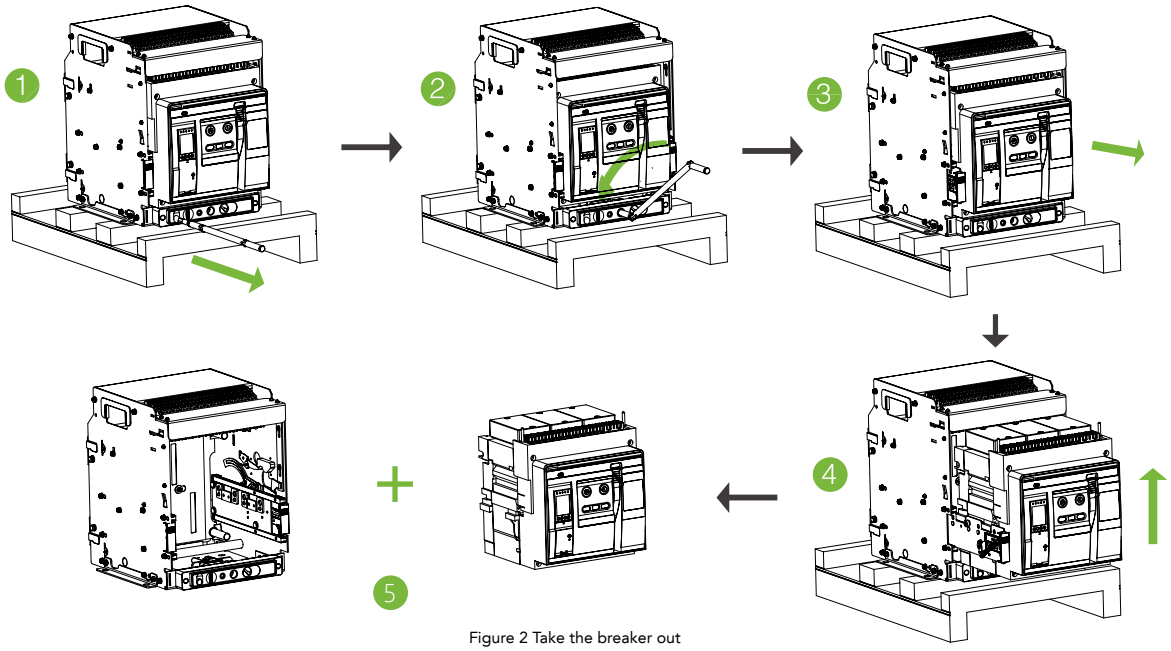

Figure 2 Take the breaker out

Note: The breaker must open before rotating from ‘connected’ to ‘test’ position.

2.2 Installation of the cassette

Put the cassette on the mounting plate of the switchgear. Screw in 4 bolts of including the spacers, the nominal diameter is 0.375 in. The torque value is 13 -18 Nm.

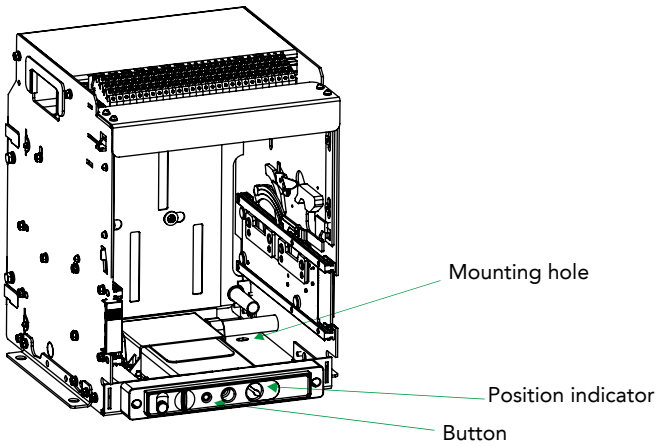

Figure 3 the mounting hole of cassette

2.3 Mount the breaker into cassette

Lift down the breaker to the rails of cassette and make sure the holders placed in the groove. Push the breaker into the cassette until it cannot be moved any more. Press the button and rotate the handle clockwise, the breaker will move to test position. When the breaker arrived, the button will pop up. Press the button again and repeat the clockwise rotation, the breaker will move to connected position. When the breaker arrived, the button will pop up and press the button again. Here, breaker is well mounted in, please remember to insert the handle back.

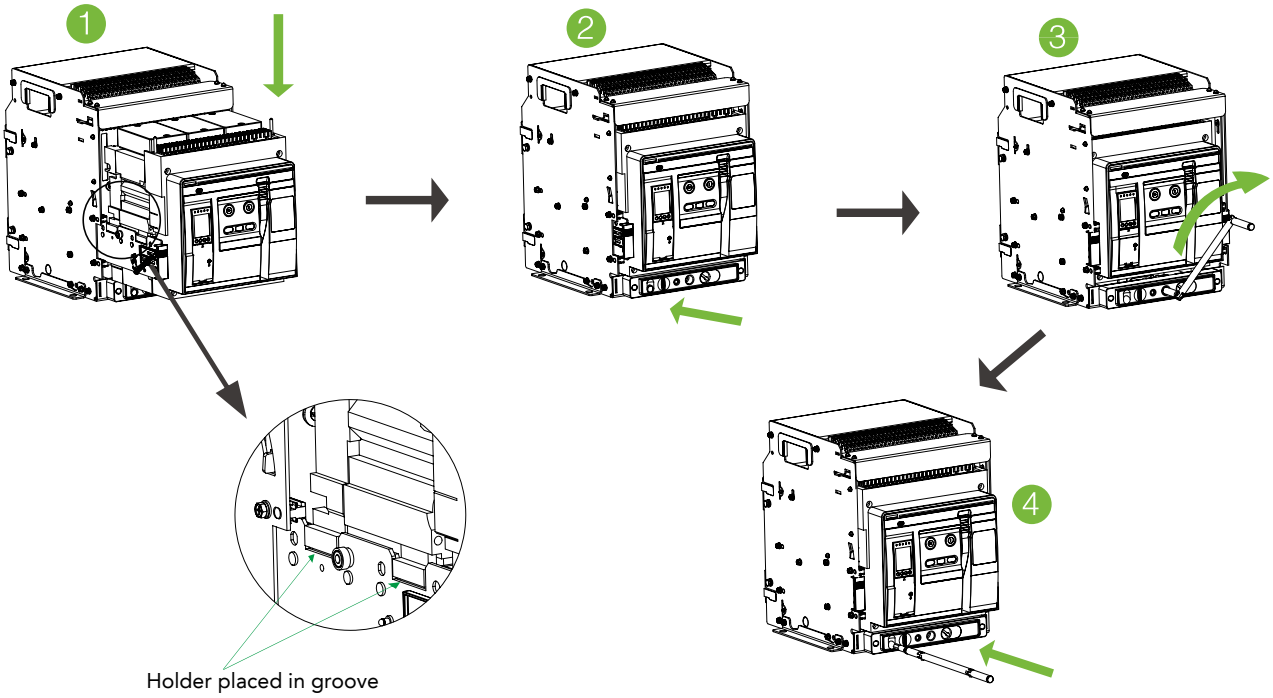

Figure 4 Mounting the breaker into the cassette

Note:The breaker must open before rotating the test to connected position.

3. Installation of the fixed breaker

Place the fixed breaker on the mounting brackets and screwed. Then connect the busbars of main circuit to the breaker terminals.

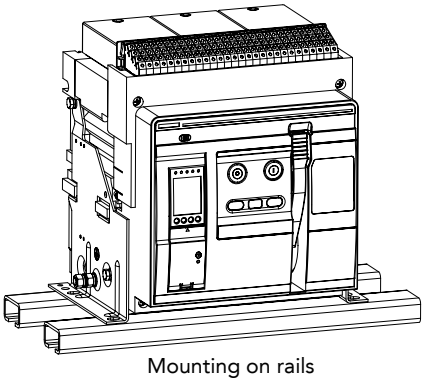

Mounting on rails

Figure 5 Mounting of the fixed breaker

Note: The mounting surface should be flat and hard enough to hold breaker, such as rail or base plate. As a reminder, the flatness of the mounting surface is around 2mm, It can eliminate any risk of deformation which may interfere with correct operation of the breaker.

4. Connection of main circuit

4.1 Power supply

A series breaker can be supplied either from upper or from lower without degrading performance, it facilitates connection when installed in electrical equipment.

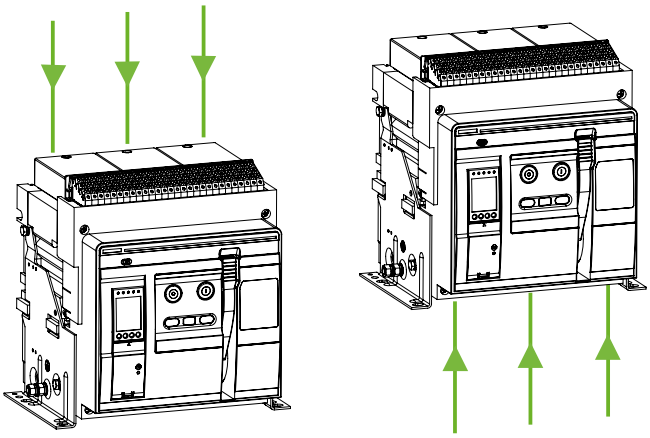

Figure 6 Top or bottom supply

4.2 Space

Breakers need enough space to ensure the air circulation. The separator between the upper and lower connection must be the non-magnetism material. In addition, metal barriers through which a conductor passes must not form a magnetic loop.

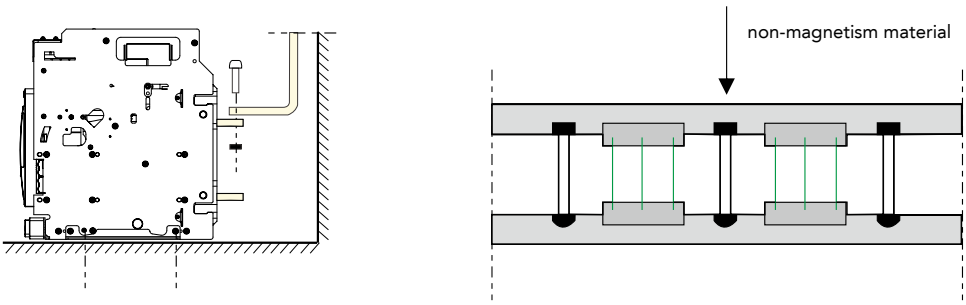

Figure 7 The supporter or barrier must be the non-magnetism material

4.3 Busbar connections

The busbars should be suitably adjusted to ensure the connection points are positioned on the terminals before the bolts B are inserted. The connections are held by the supporter which is fixed to the framework of the switchboard, in this way the breaker terminals do not have to support its weight C.

Dynamic stability: The maximum distance between the busbar support and the connection point of breaker should conform to the value in table 1. The distance is required so that the busbar can withstand the electrodynamic stresses between phases in case of a short circuit.

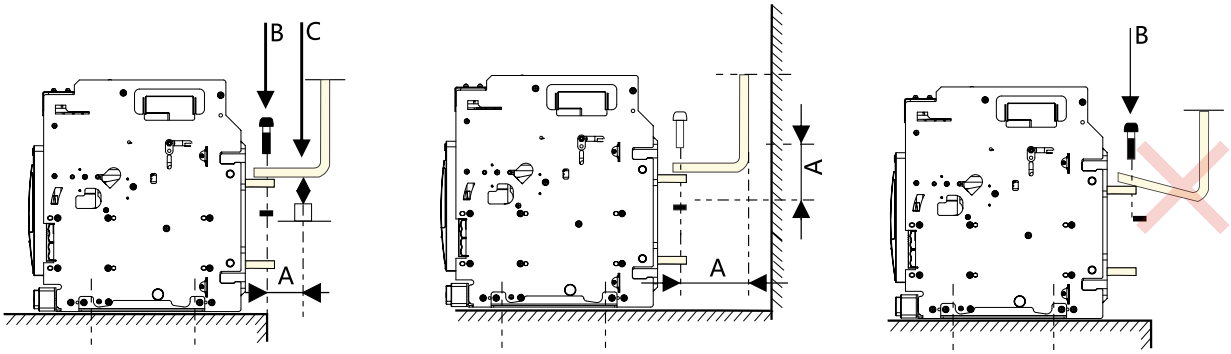

Table1: The distance between the busbar support and connection point of breaker (Maximum)

Rated Short Circuit Current	65KA	85KA	100KA
Distance A	9.84in(250mm)	5.91in(150mm)	5.91in(150mm)

4.4 Cable connection

If cables are used for the power connections, ensure that no excessive mechanical force applied to the circuit breaker terminals. Use the recommended type of connecting busbar to extend the breaker terminals.

Make the connections as follows:

(1) Position the cable lugs before inserting the bolts.

(2) Firmly secure the cables to the framework of the switchboard

(3) For a single cable, use Solution A, for a multiple cables, use Solution B

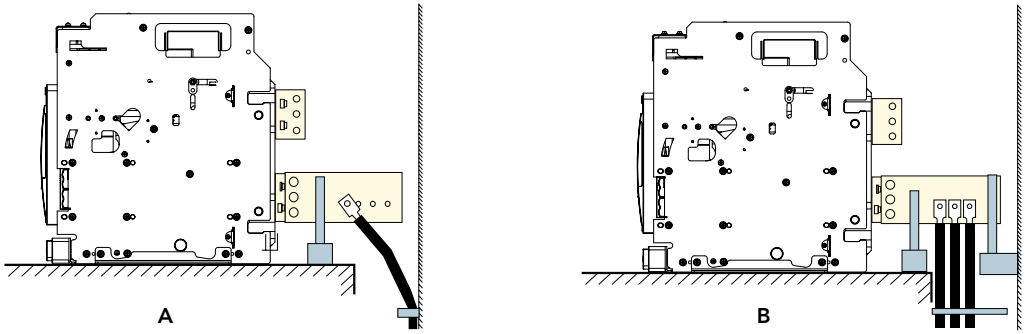

Figure 9: Cable connection

4.5 Fix

For connecting busbars to the circuit breaker, the tightening torques to be used are shown in the table below.

Model	Recommended tighting torque
A25	30-40N·m
A32	40-50N·m
A40	40-50N·m

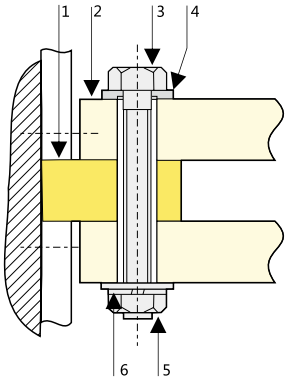

1 Terminal of breaker
2 Busbar
3 Bolt
4 Spacer
5 Nut
6 Spring washer

Figure 10 Busbar fix

4.6 Drilling on the busbar

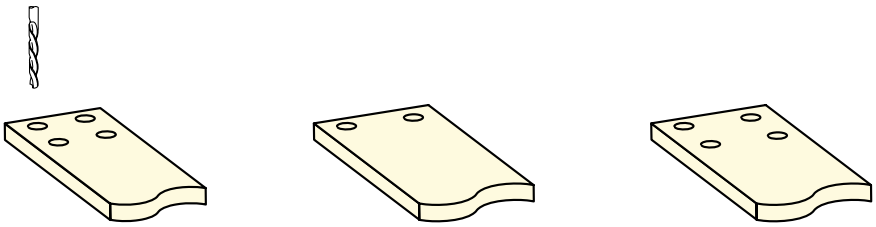

Torque		
Norminal dimeter Φ in(mm)	Hole dimeter Φ in(mm)	Torque (Nm)
3/8 (9.5)	7/16 (11.1)	30-40
7/16 (11.1)	1/2 (12.7)	40-50

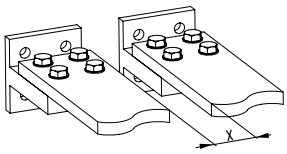

X>1In (25.4mm)

A Series Power Circuit Breakers Bus Bar Recommendation							
Model	Rated current	Vertical			Horizontal		
		Qty	Size(in)	Size(mm)	Qty	Size(in)	Size(mm)
A25	600A	1	1/4×2	6.35X50.8	1	1/4×2	6.35X50.8
A25	800A	1	1/4×3	6.35X76.2	1	1/4×3	6.35X76.2
A25	1200A	2	1/4×2	6.35X50.8	2	1/4×2	6.35X50.8
A25	1600A	2	1/4×3	6.35X76.2	2	1/4×3	6.35X76.2
A25	2000A	2	1/4×4	6.35X101.6	3	1/4×3	6.35X76.2
A25	2500A	3	1/4×4	6.35X101.6	5	1/4×3	6.35X76.2
A32	800A	1	1/4×3	6.35X76.2	1	1/4×3	6.35X76.2
A32	1600A	2	1/4×3	6.35X76.2	2	1/4×3	6.35X76.2
A32	2000A	2	1/4×4	6.35X101.6	3	1/4×3	6.35X76.2
A32	2500A	3	1/4×4	6.35X101.6	5	1/4×3	6.35X76.2
A32	3200A	4	1/4×4	6.35X101.6	/	/	/
A40	4000A	5	1/4×4	6.35X101.6	/	/	/

Note: These table should be used as a general guideline only, the solution used should take into consideration the varieties of switchgear types and conditions.

5. Installation of ground wire

The grounding wire is connected to the left side of the breaker

Torque: 30-40N.m

5.1 Drawout type installation position

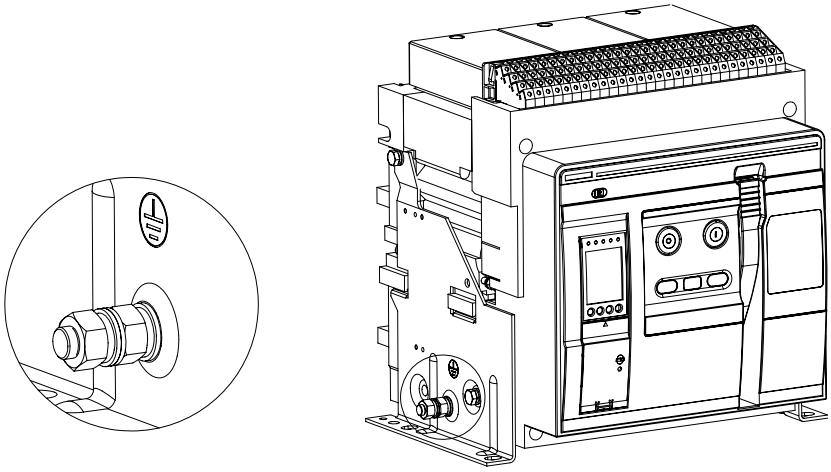

5.2 Fixed type installation position

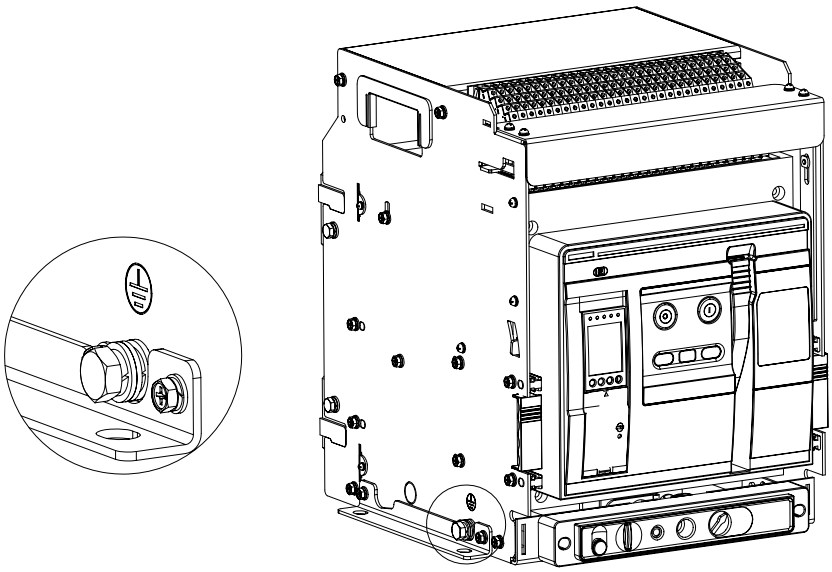

Handling

Unit: lb (Kg)

A25&ASD25	Fixed	3P	Power Circuit Breaker		Non-Automatic Switch	
			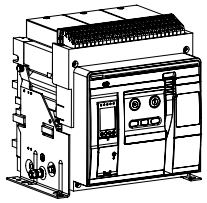		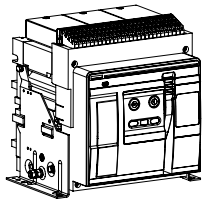	
		Rating/A	Net Weight	Gross Weight	Net Weight	Gross Weight
		600&800&1200	104(47)	134(61)	97(44)	128(58)
		1600&2000	106(48)	137(62)	101(46)	132(60)
		2500	119(54)	150(68)	112(51)	143(65)
		4P	Power Circuit Breaker		Non-Automatic Switch	
			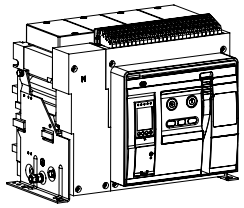		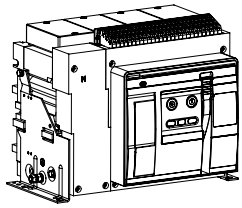	
		Rating/A	Net Weight	Gross Weight	Net Weight	Gross Weight
		600&800&1200	128(58)	161(73)	121(55)	154(70)
		1600&2000	132(60)	165(75)	126(57)	159(72)
		2500	148(67)	181(82)	143(65)	176(80)
	Drawout	3P	Power Circuit Breaker		Non-Automatic Switch	
			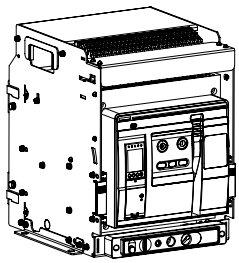		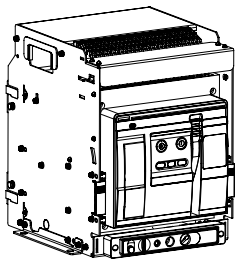	
		Rating/A	Net Weight	Gross Weight	Net Weight	Gross Weight
		600&800&1200	194(88)	227(103)	187(85)	220(100)
		1600&2000	200(91)	233(106)	194(88)	227(103)
		4P	Power Circuit Breaker		Non-Automatic Switch	
			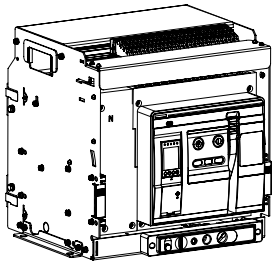		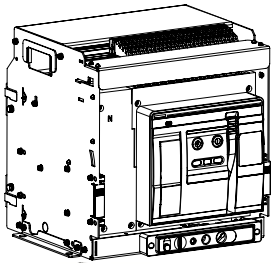	
		Rating/A	Net Weight	Gross Weight	Net Weight	Gross Weight
		600&800&1200	234(106)	273(124)	227(103)	267(121)
		1600&2000	240(109)	280(127)	234(106)	273(124)

Handling

Unit: lb (Kg)

A32&ASD32	Fixed	3P	Power Circuit Breaker		Non-Automatic Switch	
			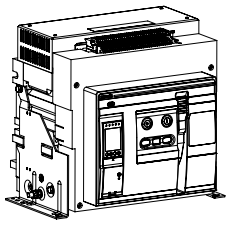		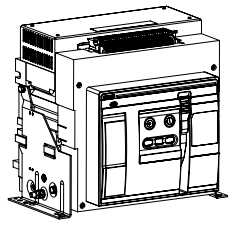	
		Rating/A	Net Weight	Gross Weight	Net Weight	Gross Weight
		800&1600	123(56)	163(74)	117(53)	156(71)
		2000&2500	133(60)	176(80)	126(57)	170(77)
		3200	147(67)	191(87)	141(64)	184(84)
		4P	Power Circuit Breaker		Non-Automatic Switch	
			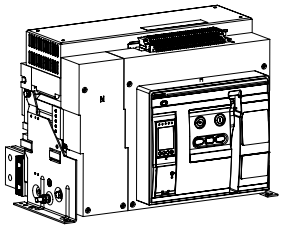		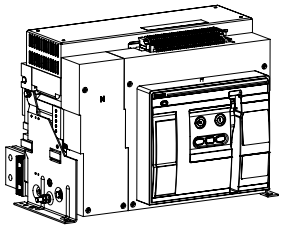	
		Rating/A	Net Weight	Gross Weight	Net Weight	Gross Weight
		800&1600	153(70)	192(87)	147(67)	185(84)
		2000&2500	166(75)	205(93)	159(72)	198(90)
		3200	185(84)	224(102)	179(81)	217(99)
	Drawout	3P	Power Circuit Breaker		Non-Automatic Switch	
			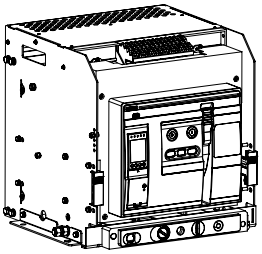		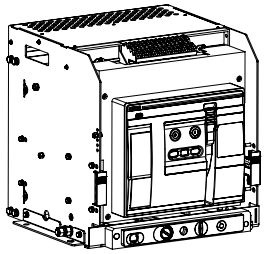	
		Rating/A	Net Weight	Gross Weight	Net Weight	Gross Weight
		800&1600	215(97)	257(117)	208(95)	250(114)
		2000&2500	245(111)	289(131)	239(109)	282(128)
		3200	264(120)	308(140)	258(117)	301(137)
		4P	Power Ciruit Breaker		Non-Automatic Switch	
			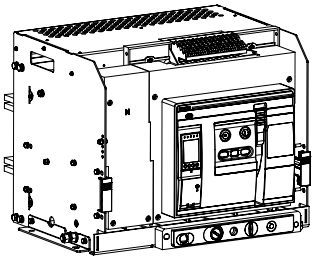		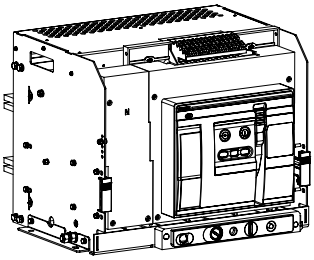	
		Rating/A	Net Weight	Gross Weight	Net Weight	Gross Weight
		800&1600	260(118)	311(141)	253(115)	304(138)
		2000&2500	309(140)	361(164)	300(136)	352(160)
		3200	331(150)	383(174)	324(147)	377(171)

Handling

Unit: lb (Kg)

A40&ASD40	Fixed	3P	Power Circuit Breaker		Non-Automatic Switch	
			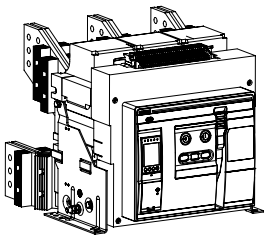		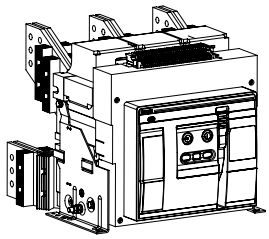	
		Rating/A	Net Weight	Gross Weight	Net Weight	Gross Weight
		4000	183(83)	231(105)	176(80)	227(103)
		4P	Power Circuit Breaker		Non-Automatic Switch	
			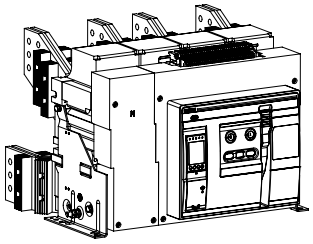		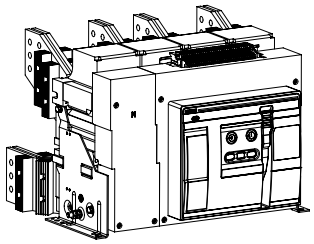	
		Rating/A	Net Weight	Gross Weight	Net Weight	Gross Weight
		4000	229(104)	273(124)	222(101)	267(121)

Handling

Transportation

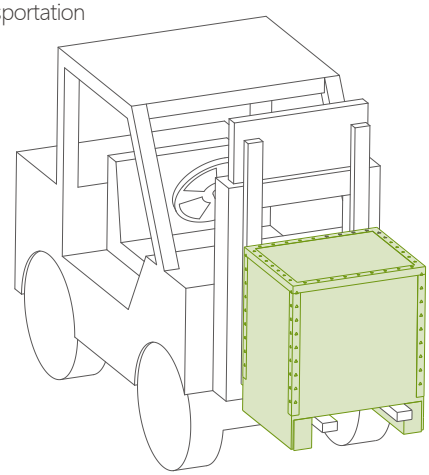

Draw out

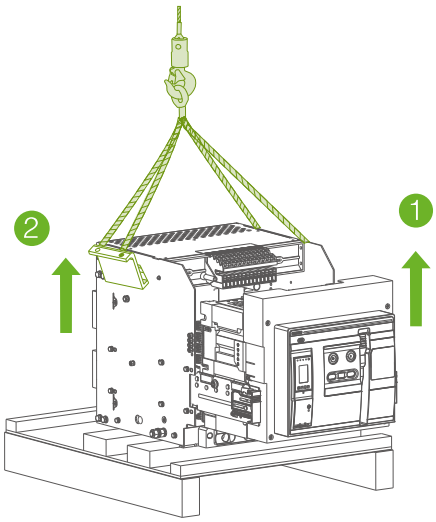

Draw out

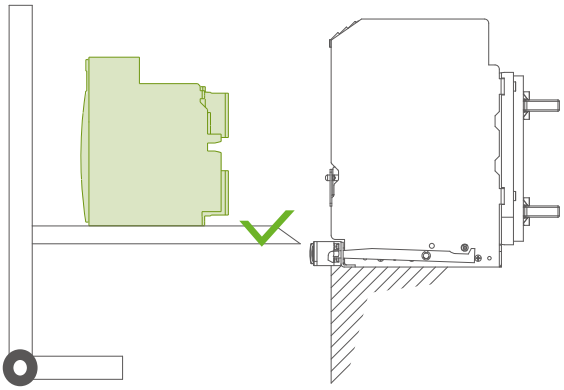

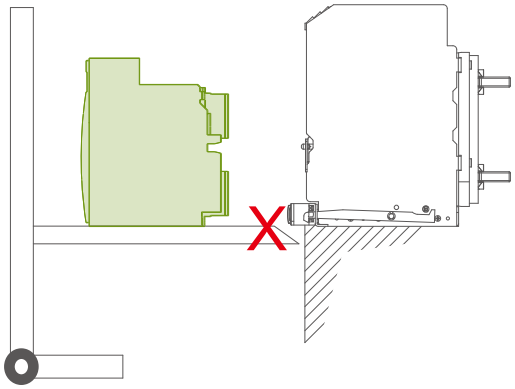

Handling

Cassette

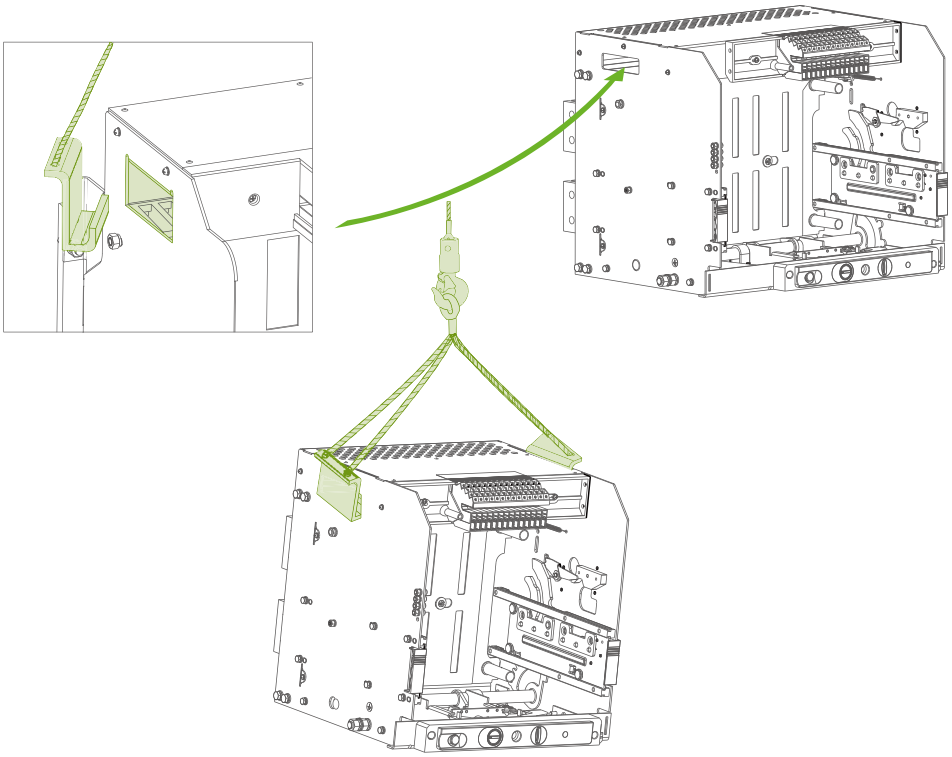

Main breaker

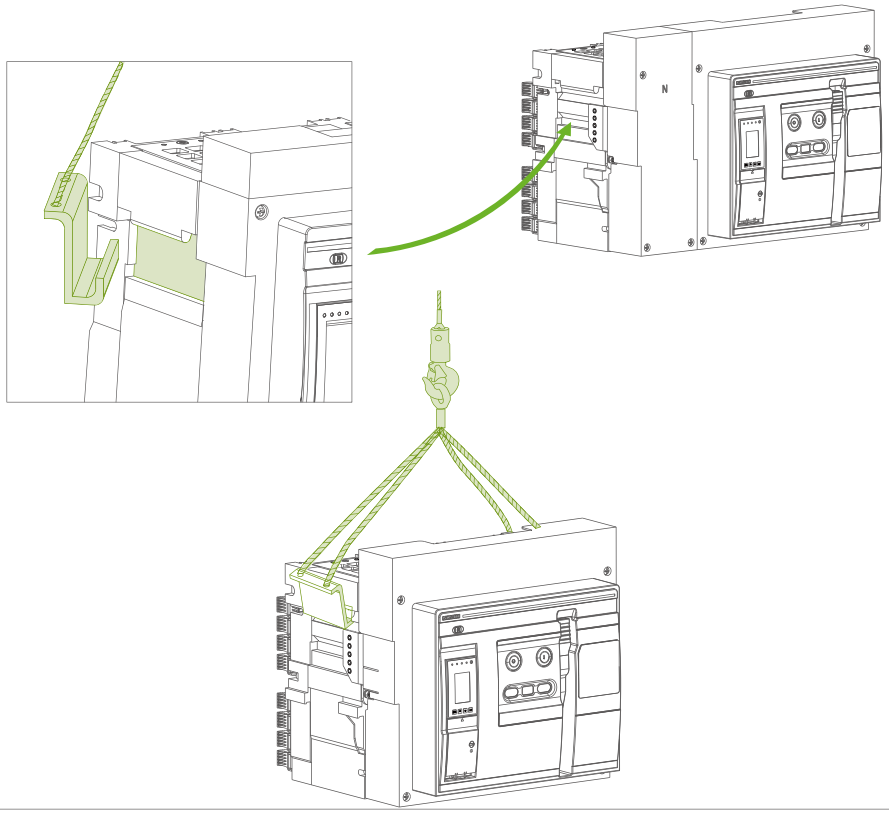

Installation Dimensionss

Fixed type

A25-600A/800A/1200A 3P

Vertical connection

in(mm)

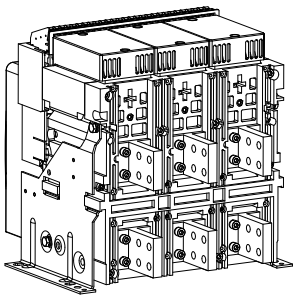

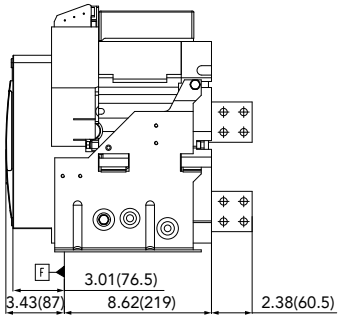

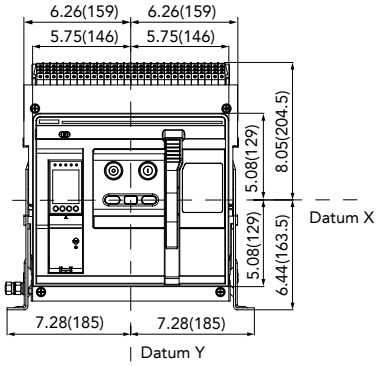

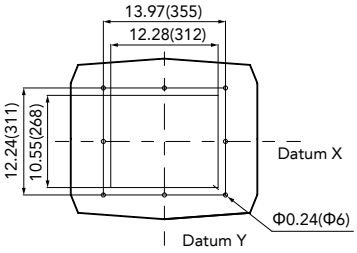

Panel perforating size

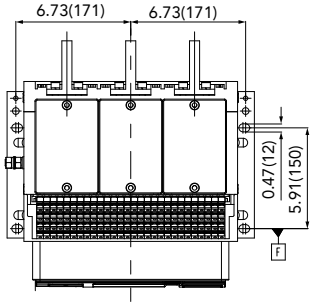

Product mounting hole

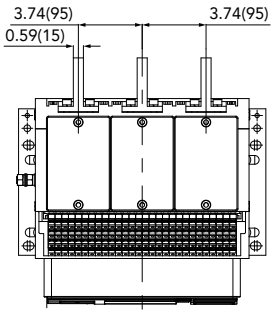

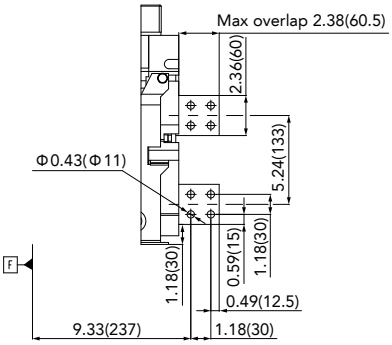

Installation Dimensions

Fixed type

A25-600A/800A/1200A 4P

Vertical connection

in(mm)

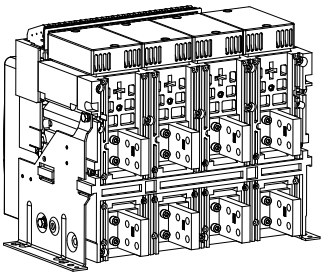

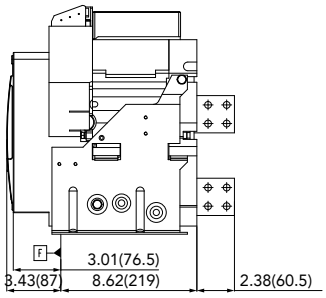

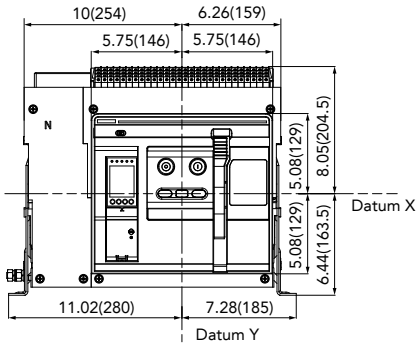

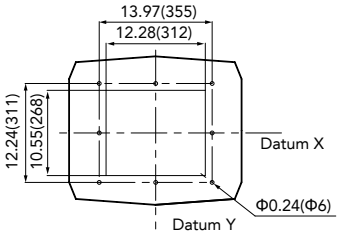

Panel perforating size

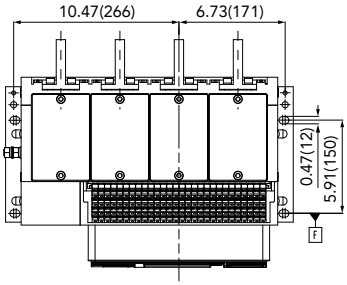

Product mounting hole

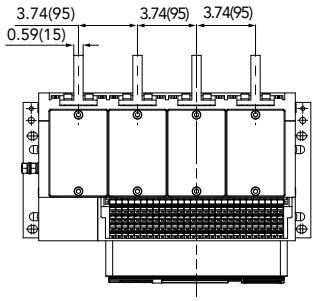

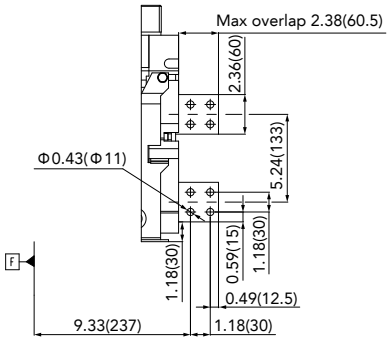

Installation Dimensions

Fixed type

A25-600A/800A/1200A 3P

Horizontal connection

in(mm)

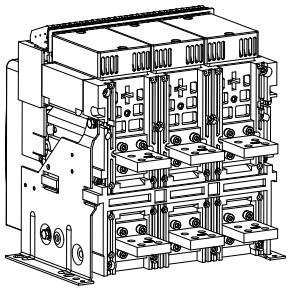

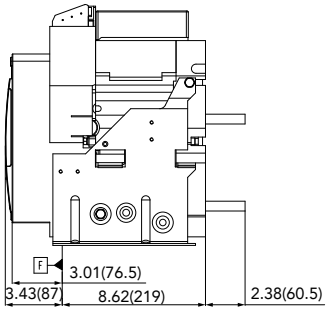

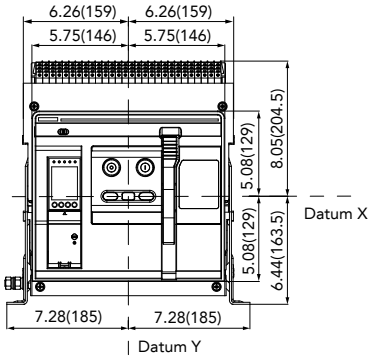

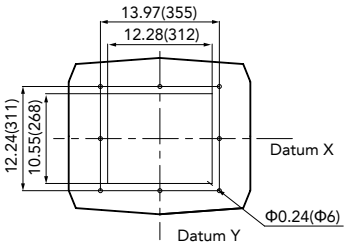

Panel perforating size

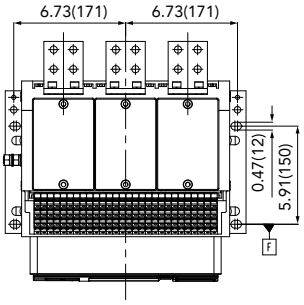

Product mounting hole

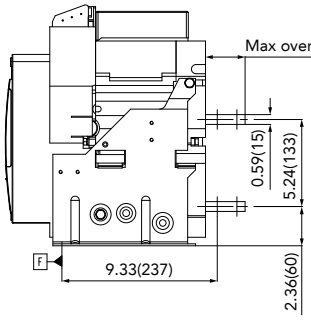

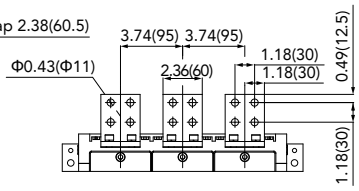

Installation Dimensions

Fixed type

A25-600A/800A/1200A 4P

Horizontal connection

in(mm)

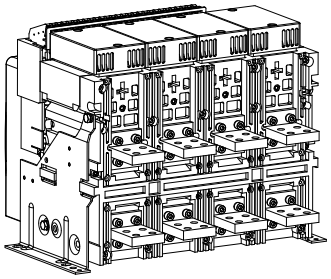

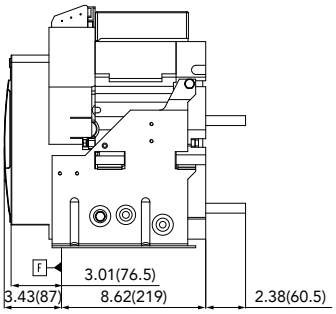

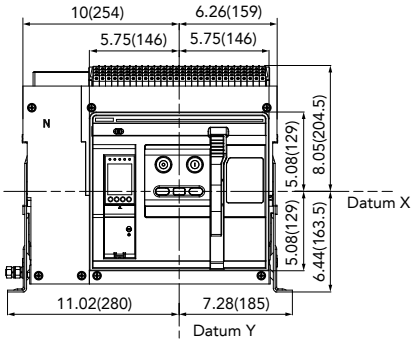

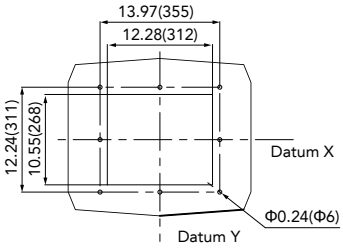

Panel perforating size

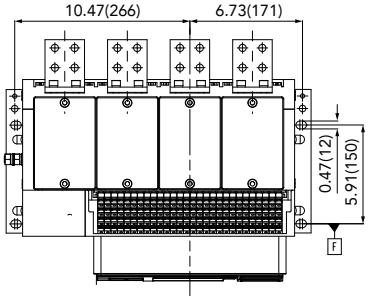

Product mounting hole

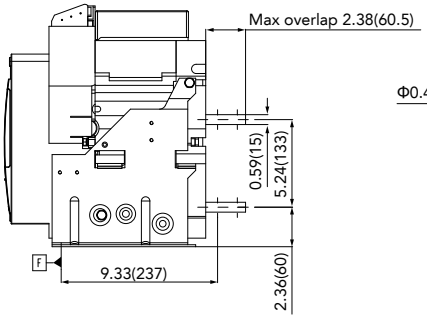

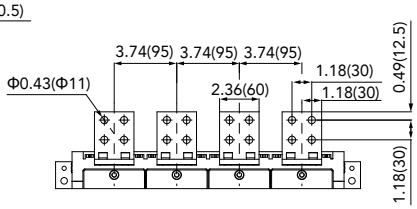

Installation Dimensions

Fixed type

A25-1600A/2000A 3P

Vertical connection

in(mm)

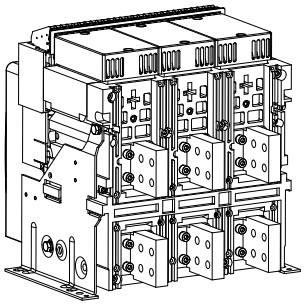

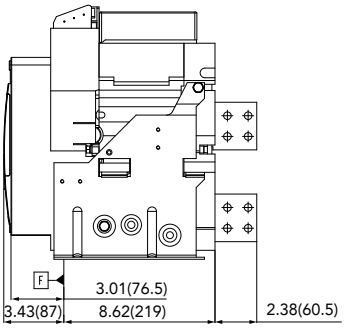

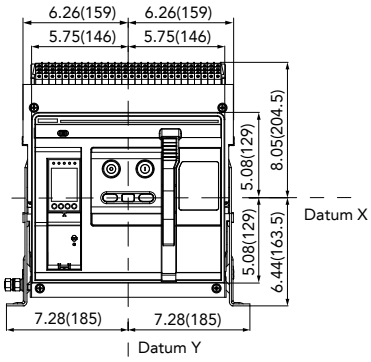

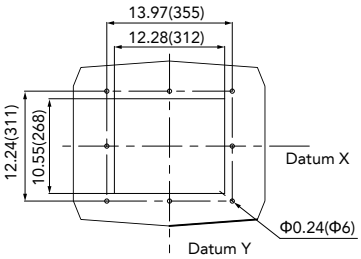

Panel perforating size

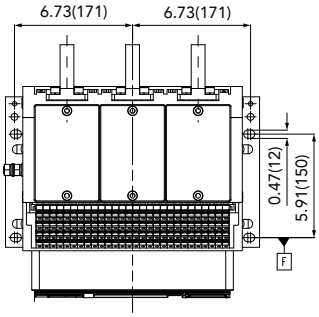

Product mounting hole

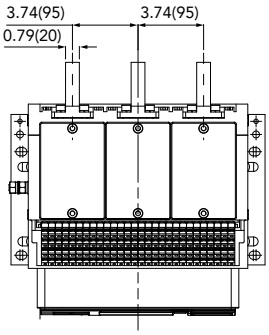

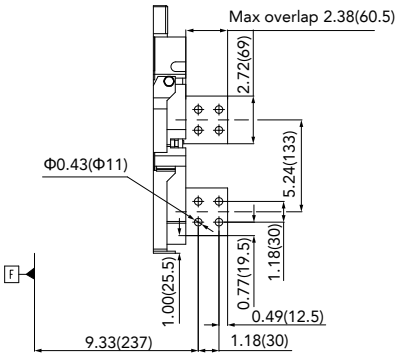

Installation Dimensions

Fixed type

A25-1600A/2000A 4P

Vertical connection

in(mm)

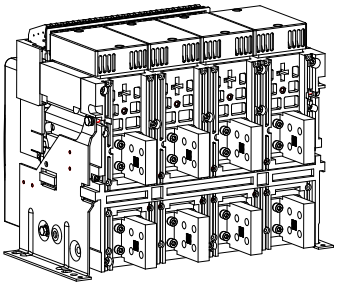

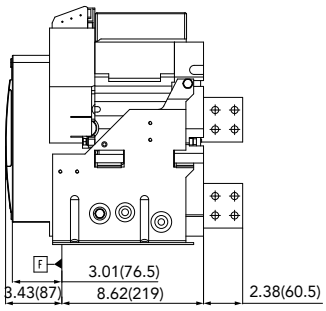

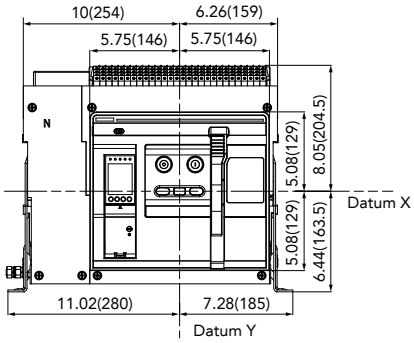

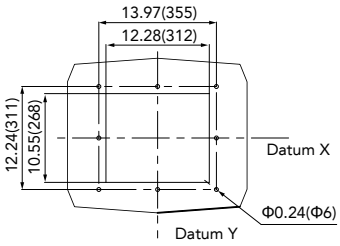

Panel perforating size

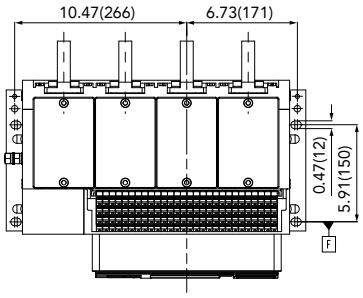

Product mounting hole

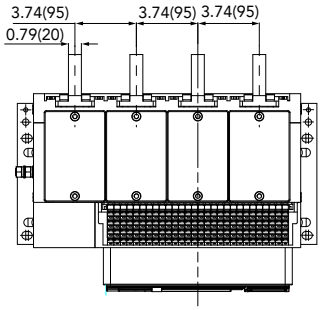

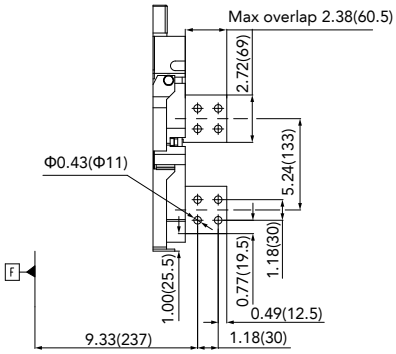

Installation Dimensions

Fixed type

A25-1600A/2000A 3P

Horizontal connection

in(mm)

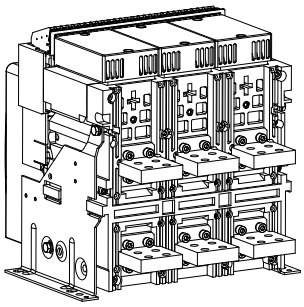

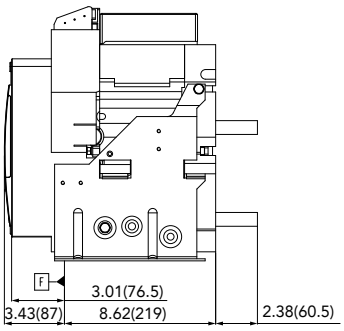

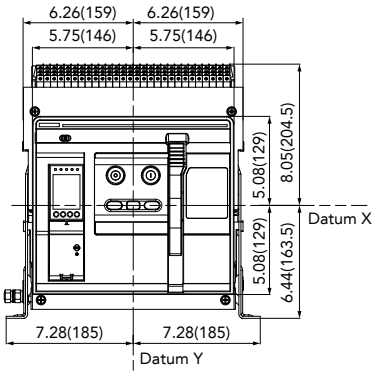

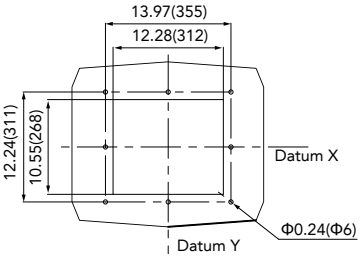

Panel perforating size

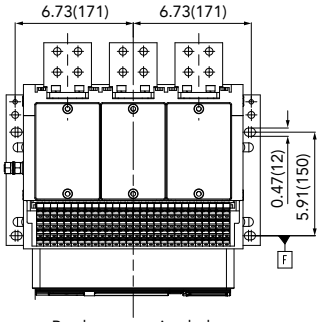

Product mounting hole

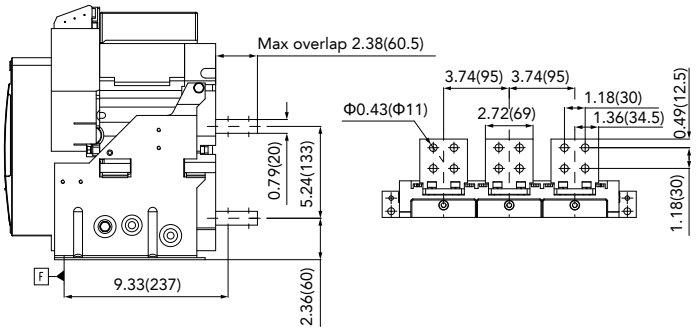

Installation Dimensions

Fixed type

A25-1600A/2000A 4P

Horizontal connection

in(mm)

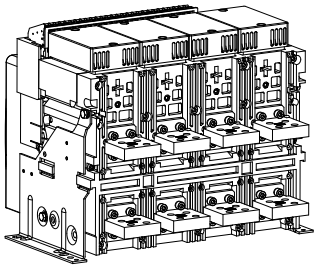

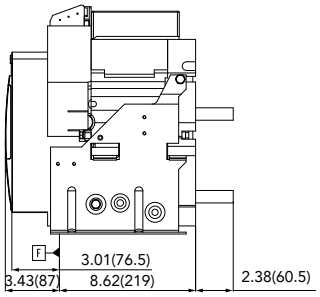

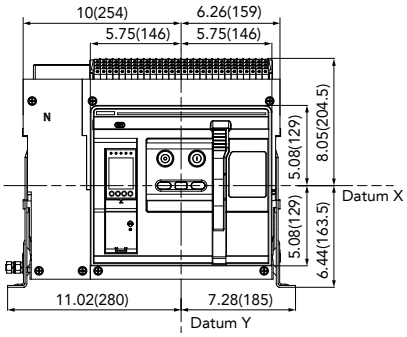

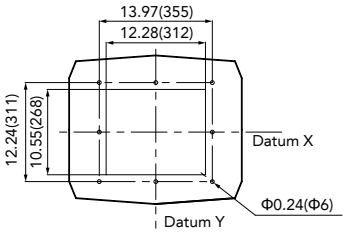

Panel perforating size

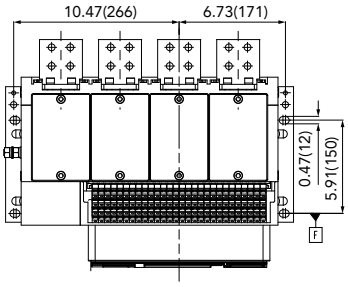

Product mounting hole

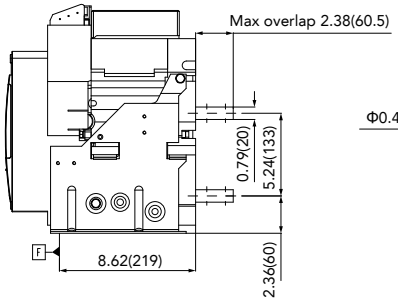

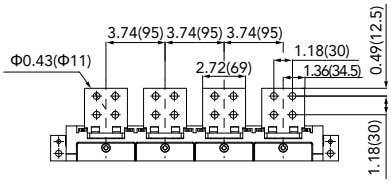

Installation Dimensions

Fixed type

A25-2500A 3P

Vertical connection

in(mm)

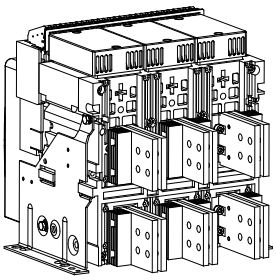

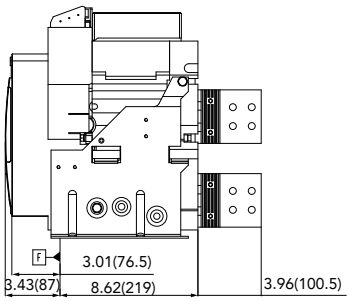

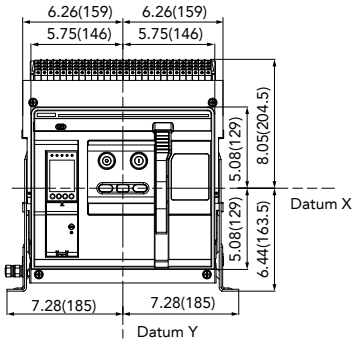

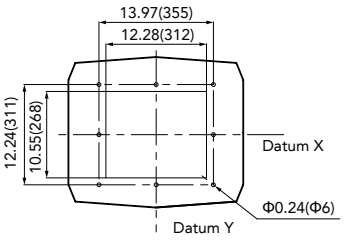

Panel perforating size

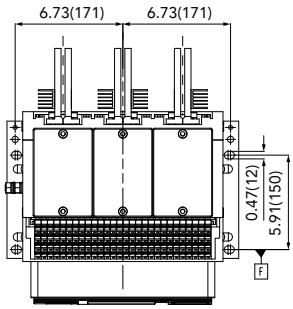

Product mounting hole

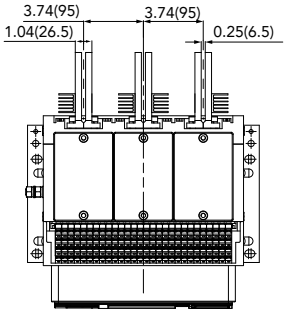

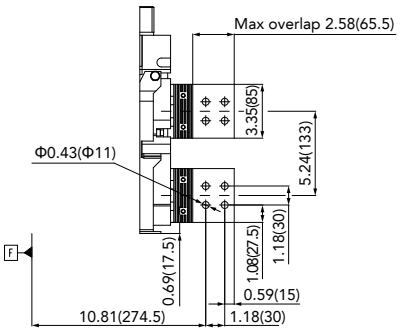

Installation Dimensions

Fixed type

A25-2500A 4P

Vertical connection

in(mm)

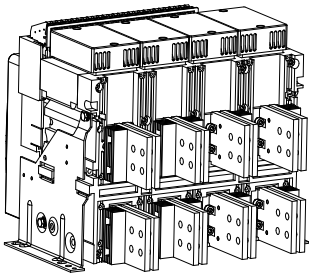

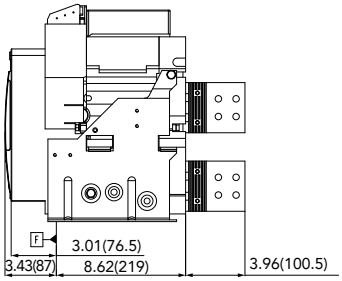

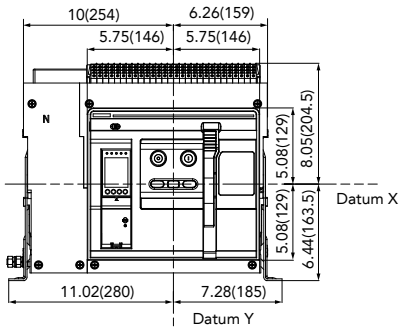

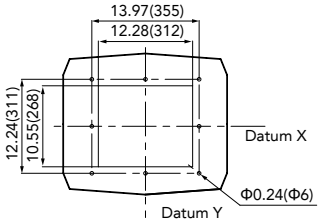

Panel perforating size

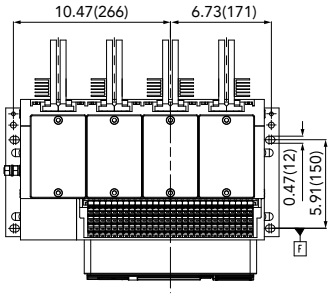

Product mounting hole

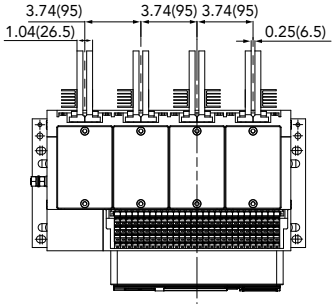

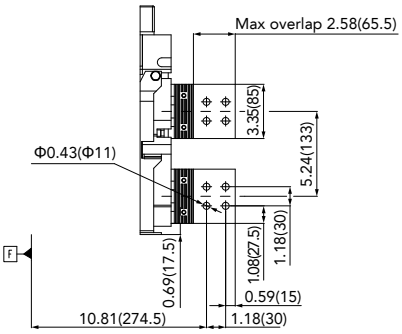

Installation Dimensions

Drawout type

A25-600A/800A/1200A 3P

Vertical connection

in(mm)

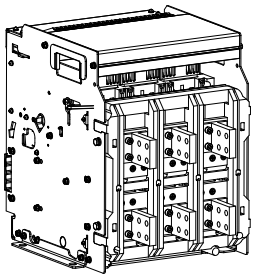

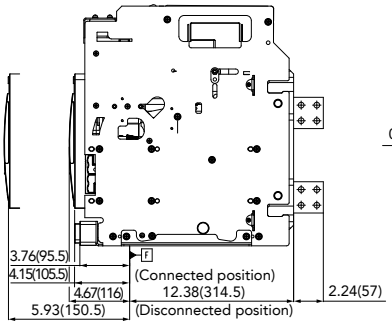

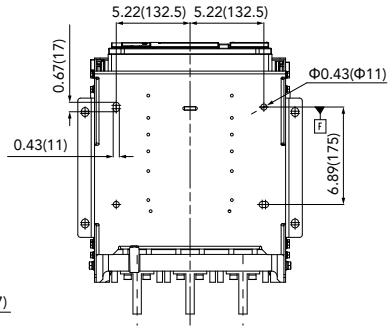

Product mounting hole

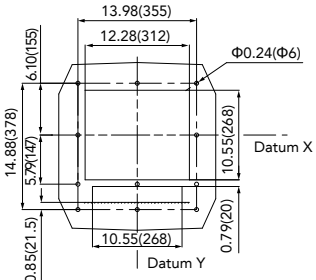

Panel perforating size

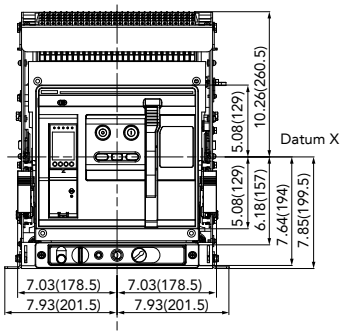

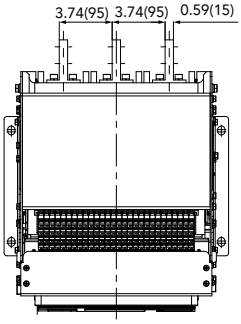

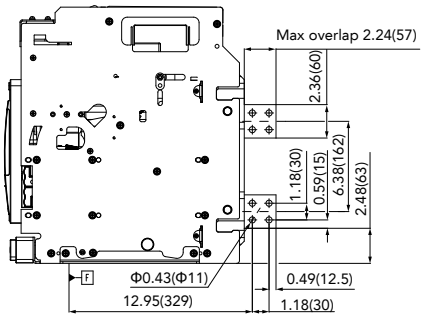

Installation Dimensions

Drawout type

A25-600A/800A/1200A 4P

Vertical connection

in(mm)

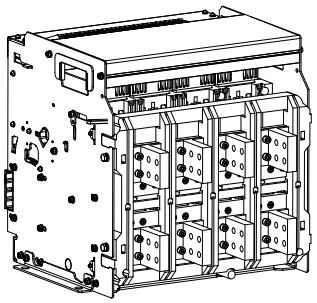

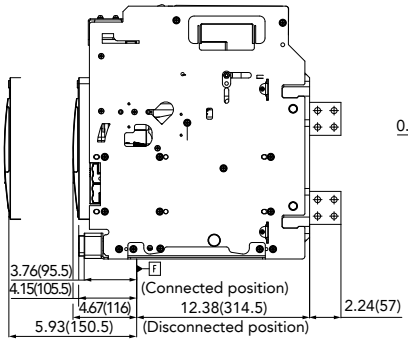

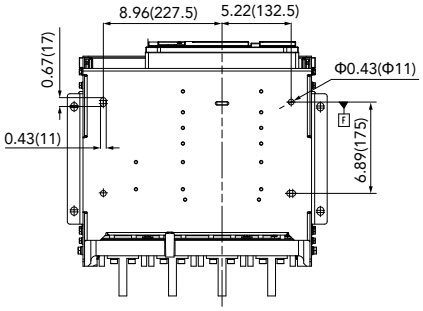

Product mounting hole

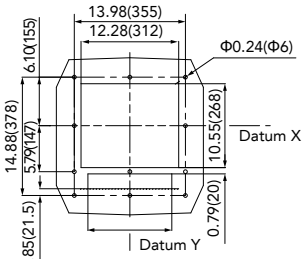

Panel perforating size

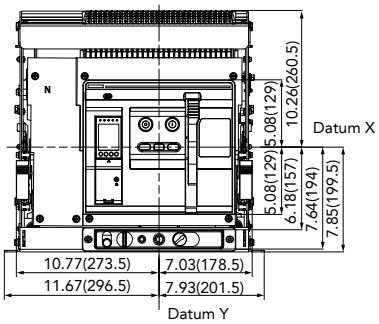

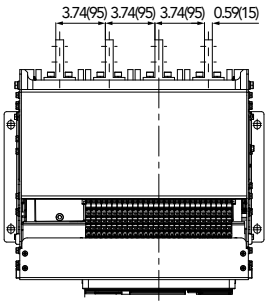

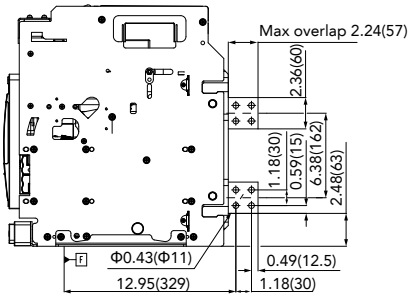

Installation Dimensions

Drawout type

A25-600A/800A/1200A 3P

Horizontal connection

in(mm)

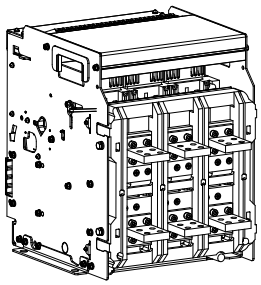

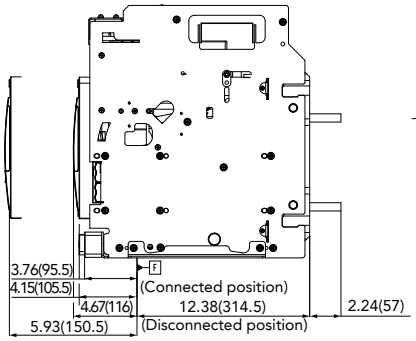

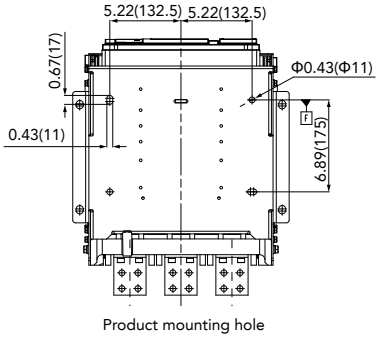

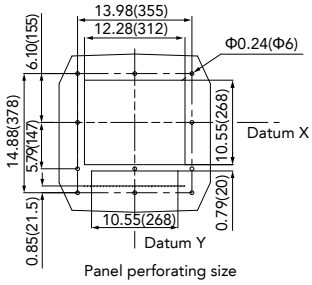

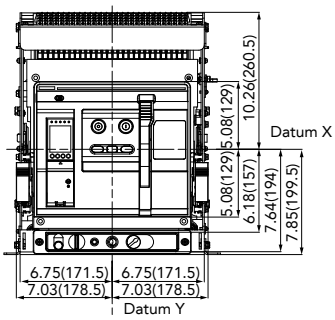

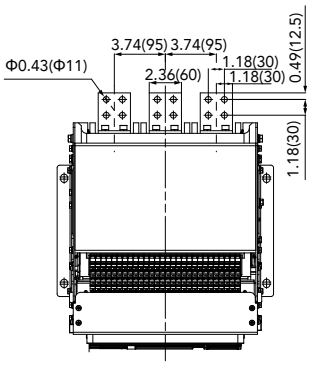

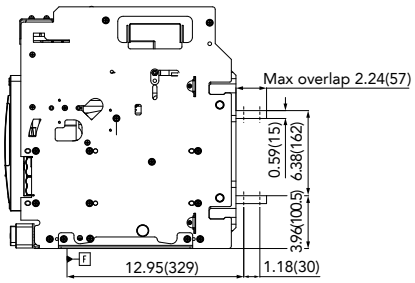

Installation Dimensions

Drawout type

A25-600A/800A/1200A 4P

Horizontal connection

in(mm)

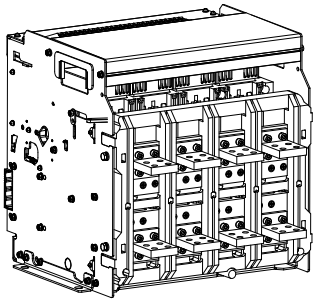

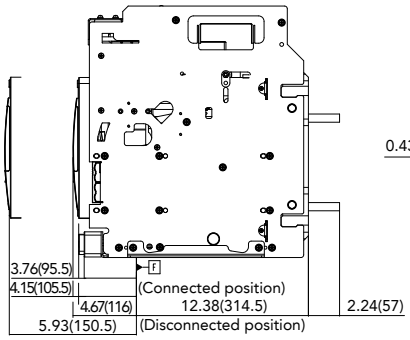

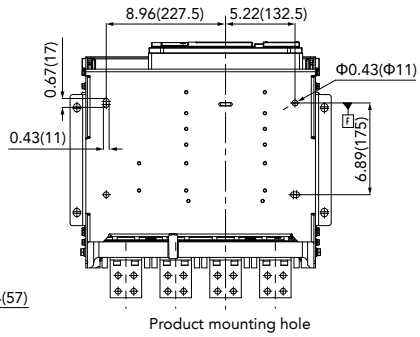

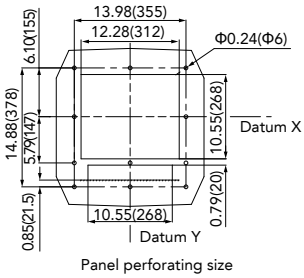

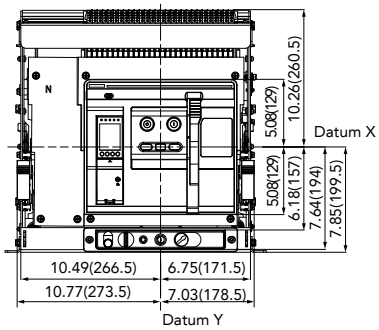

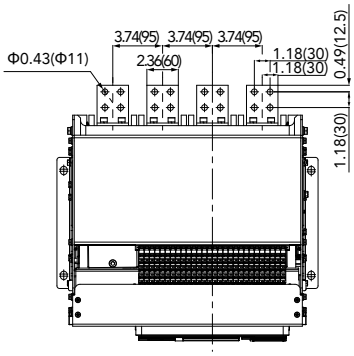

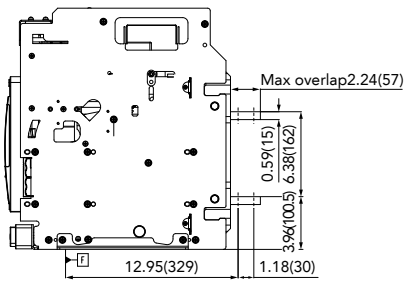

Installation Dimensions

Drawout type

A25-1600A/2000A 3P

Vertical connection

in(mm)

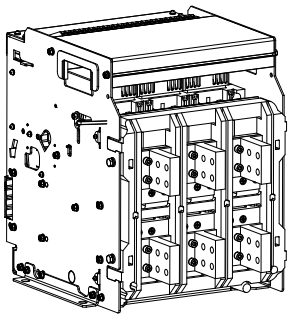

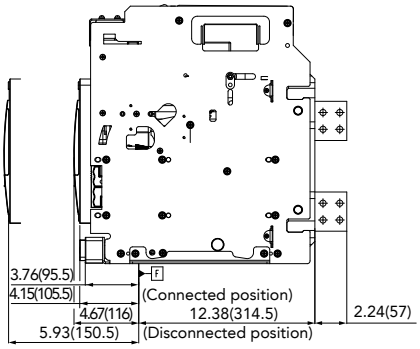

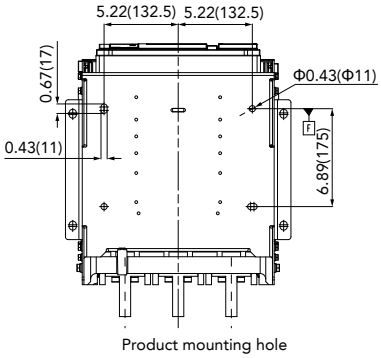

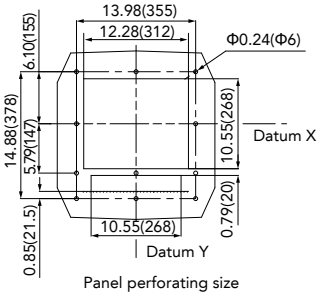

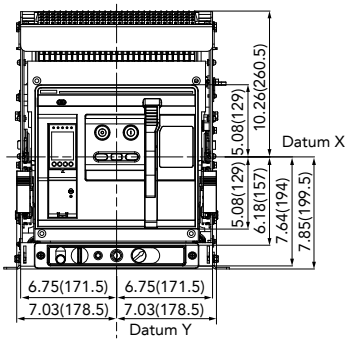

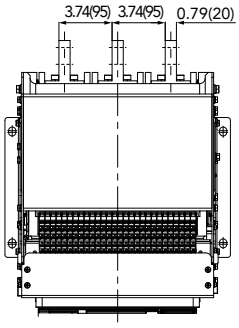

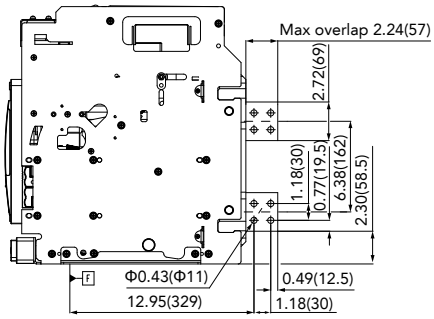

Installation Dimensions

Drawout type

A25-1600A/2000A 4P

Vertical connection

in(mm)

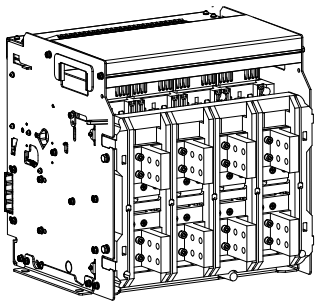

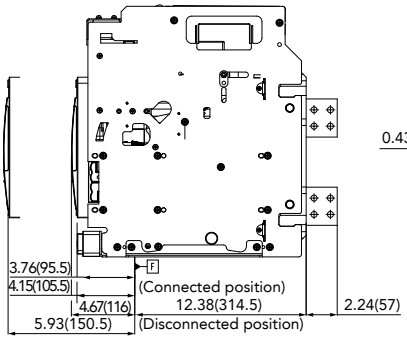

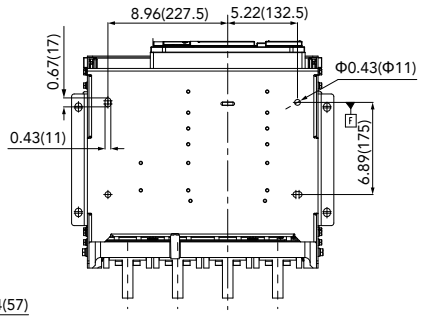

Product mounting hole

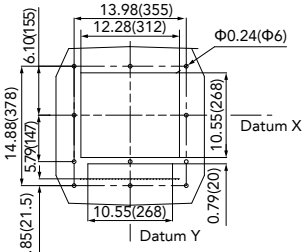

Panel perforating size

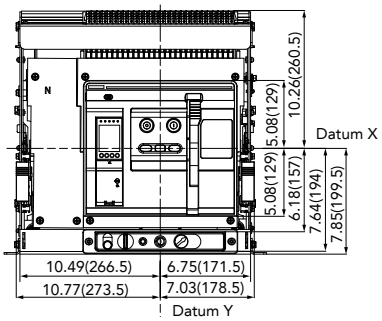

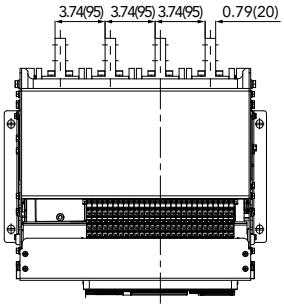

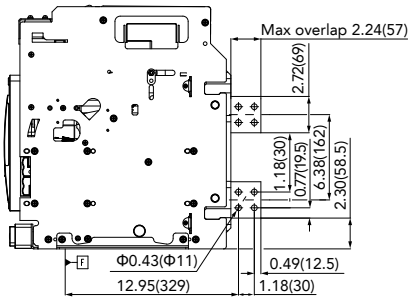

Installation Dimensions

Drawout type

A25-1600A/2000A 3P

Horizontal connection

in(mm)

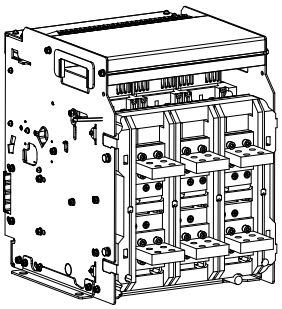

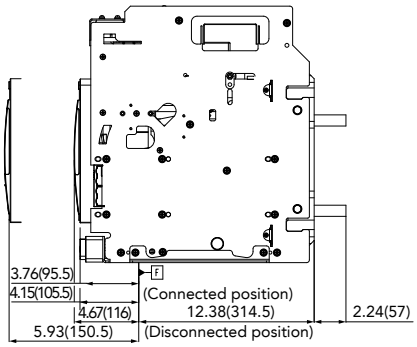

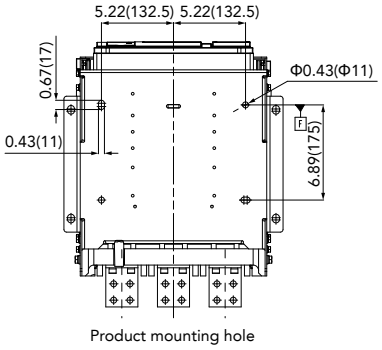

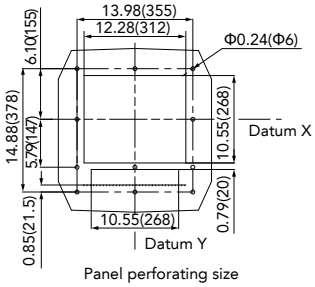

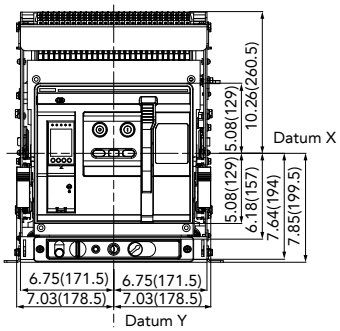

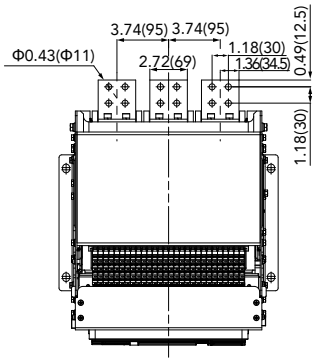

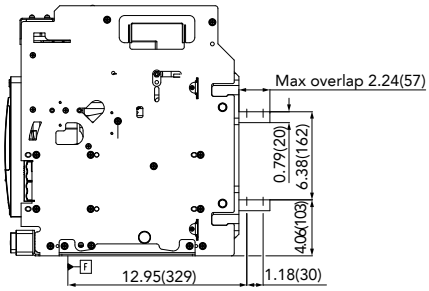

Installation Dimensions

Drawout type

A25-1600A/2000A 4P

Horizontal connection

in(mm)

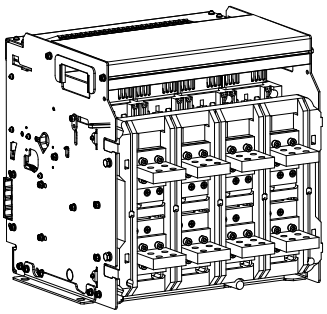

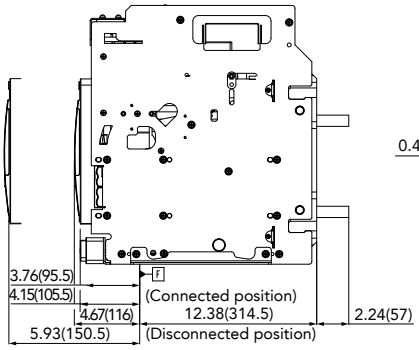

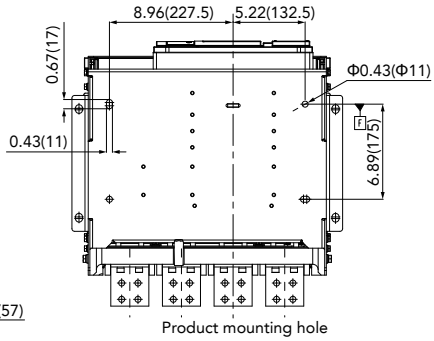

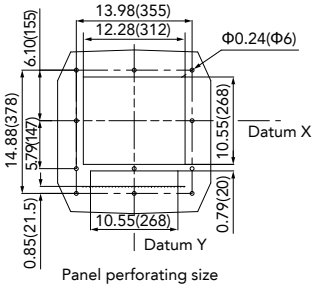

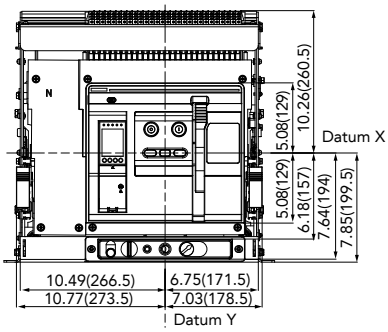

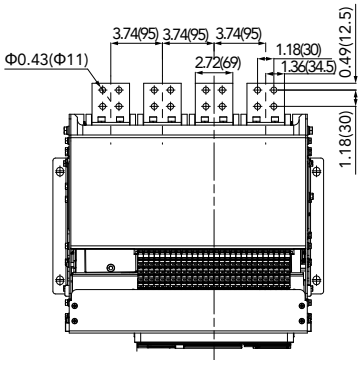

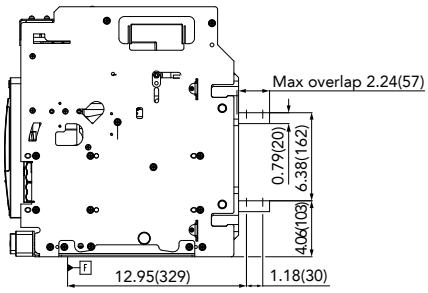

Installation Dimensions

Fixed type

A32-800A/1600A 3P

Vertical connection

in(mm)

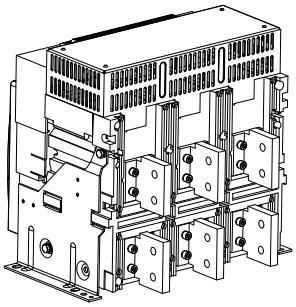

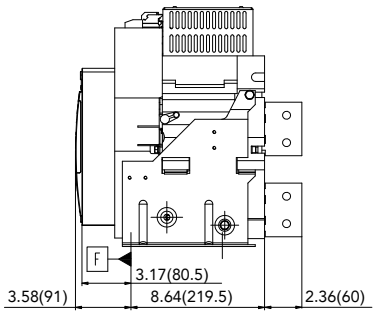

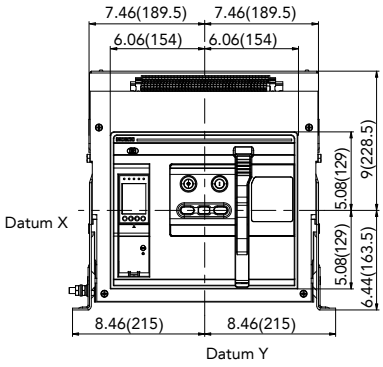

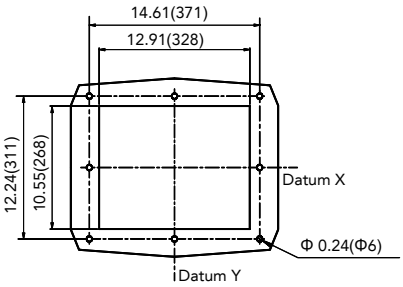

Panel perforating size

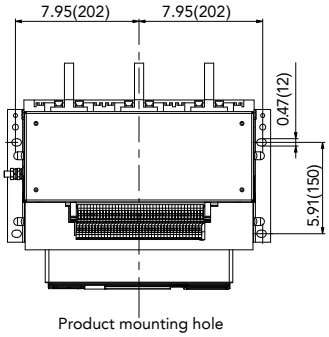

Product mounting hole

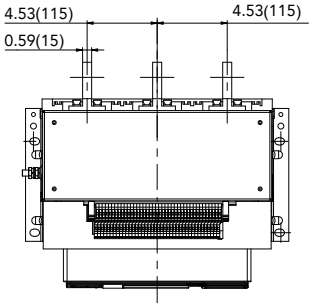

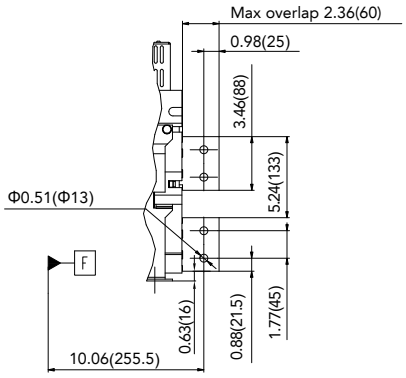

Installation Dimensions

Fixed type

A32-800A/1600A 4P

Vertical connection

in(mm)

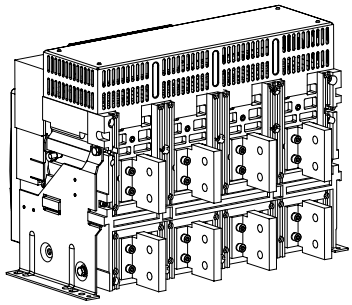

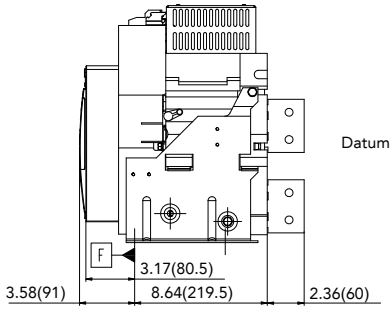

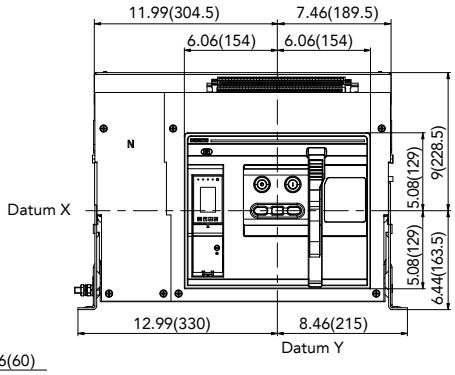

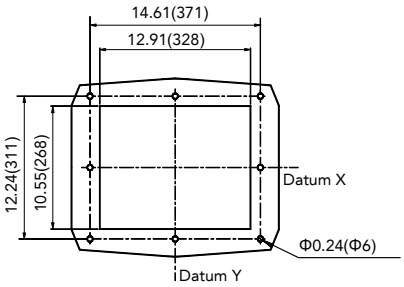

Panel perforating size

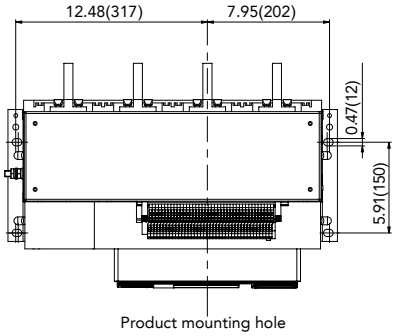

Product mounting hole

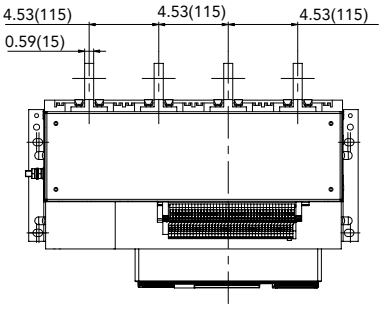

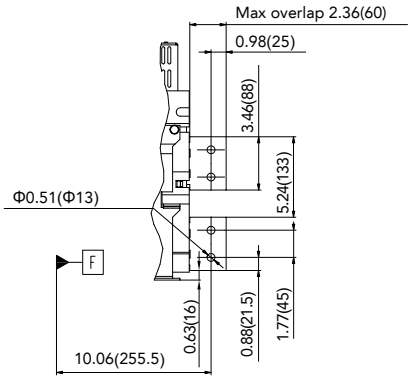

Installation Dimensions

Fixed type

A32-800A/1600A 3P

Horizontal connection

in(mm)

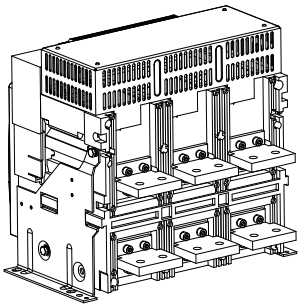

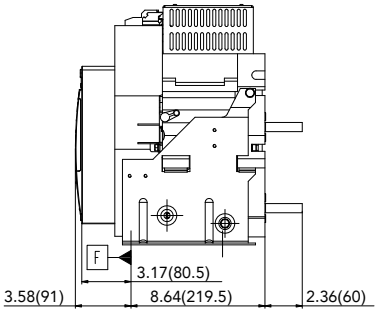

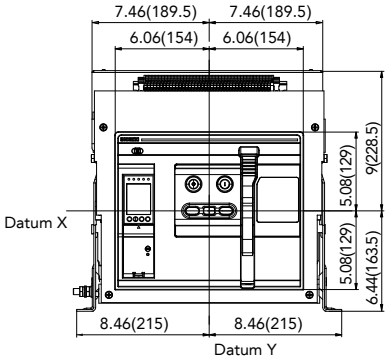

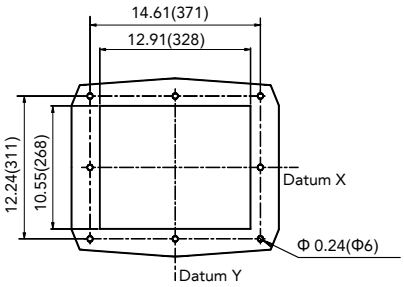

Panel perforating size

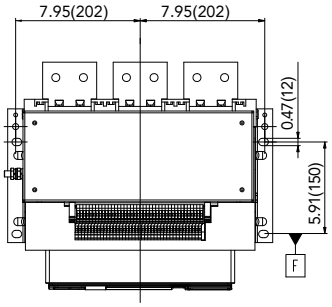

Product mounting hole

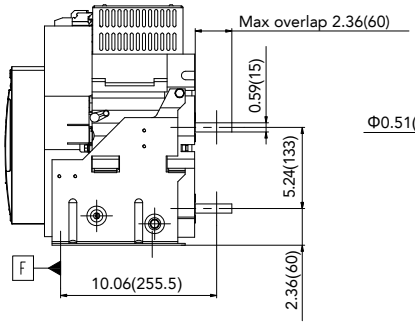

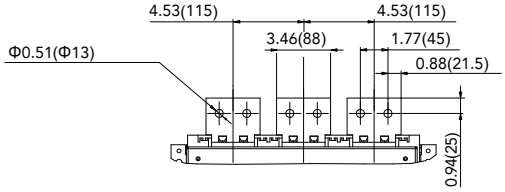

Installation Dimensions

Fixed type

A32-800A/1600A 4P

Horizontal connection

in(mm)

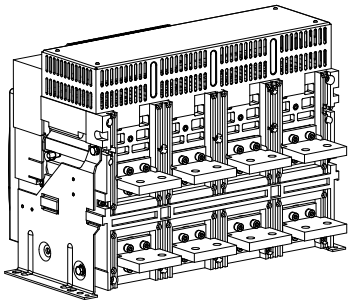

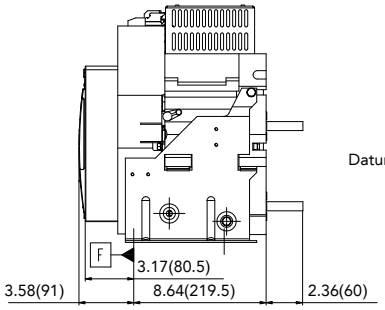

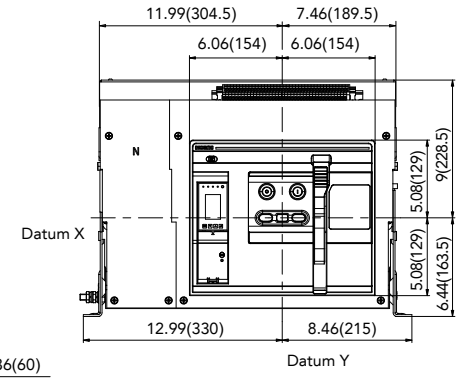

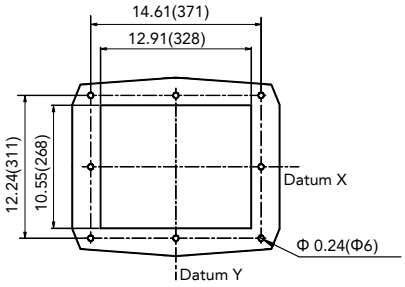

Panel perforating size

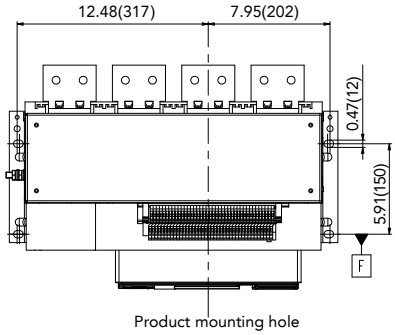

Product mounting hole

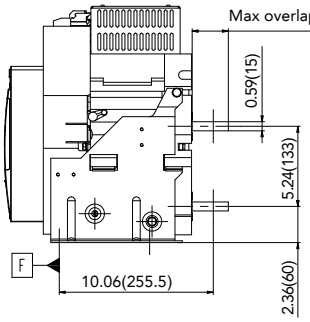

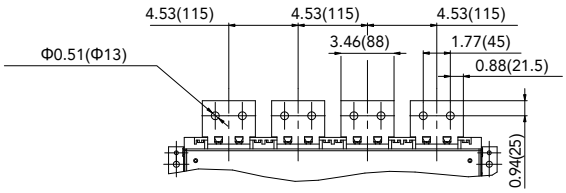

Installation Dimensions

Fixed type

A32-2000A/2500A 3P

Vertical connection

in(mm)

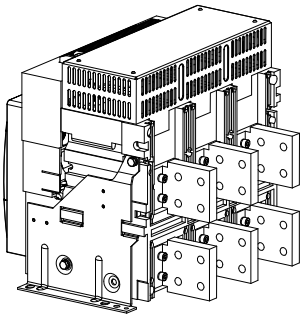

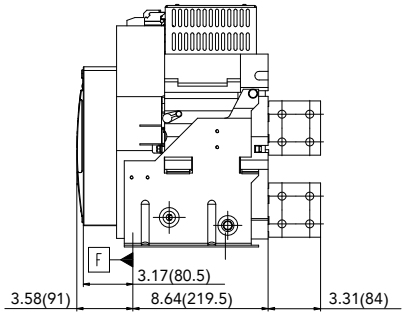

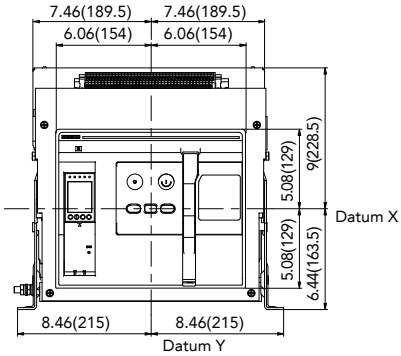

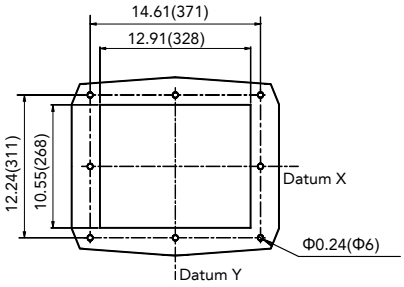

Panel perforating size

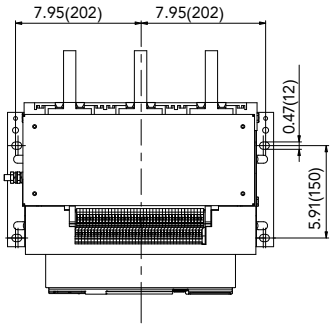

Product mounting hole

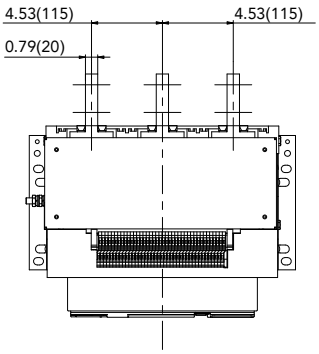

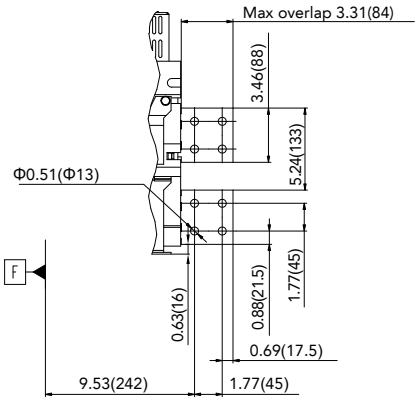

Installation Dimensions

Fixed type

A32-2000A/2500A 4P

Vertical connection

in(mm)

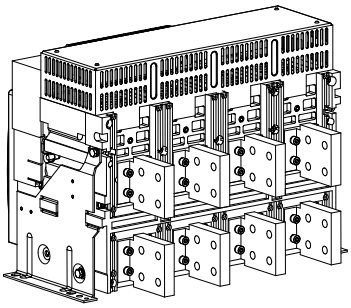

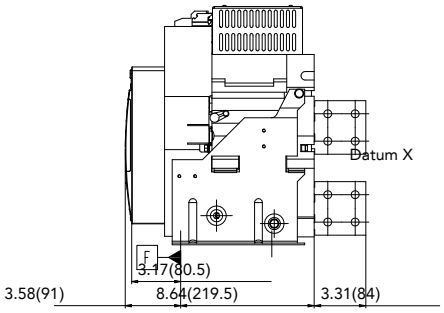

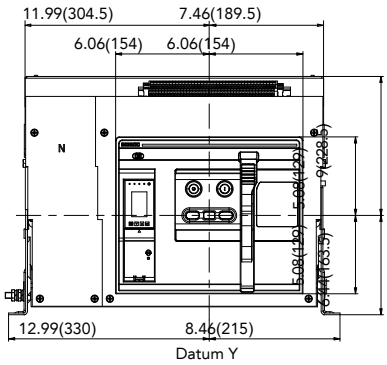

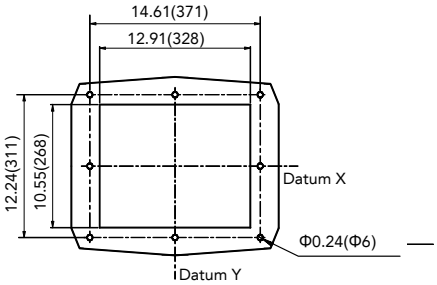

Panel perforating size

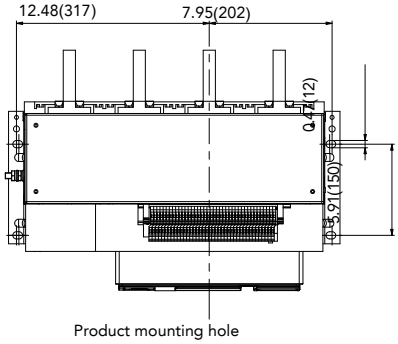

Product mounting hole

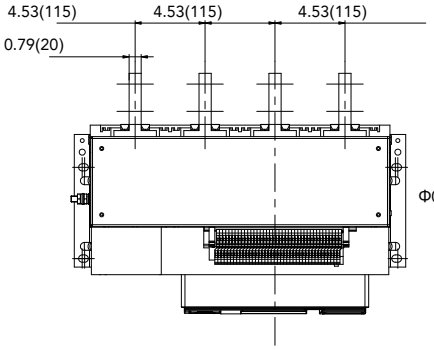

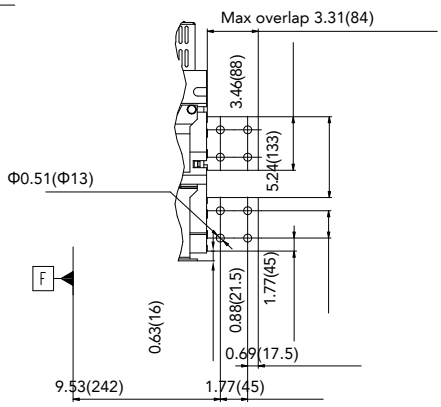

Installation Dimensions

Fixed type

A32-2000A/2500A 3P

Horizontal connection

in(mm)

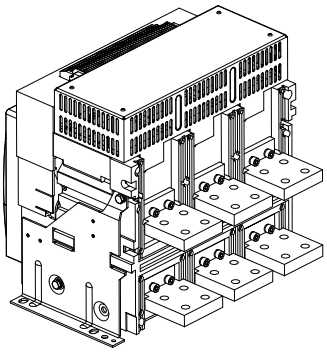

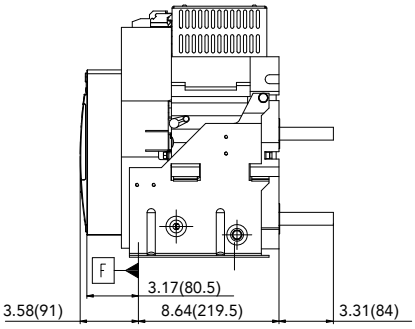

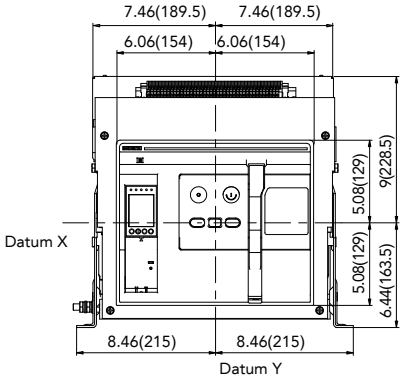

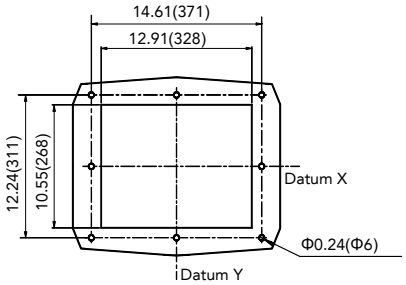

Panel perforating size

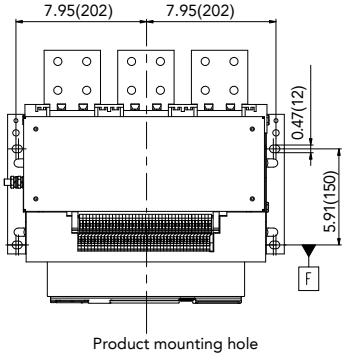

Product mounting hole

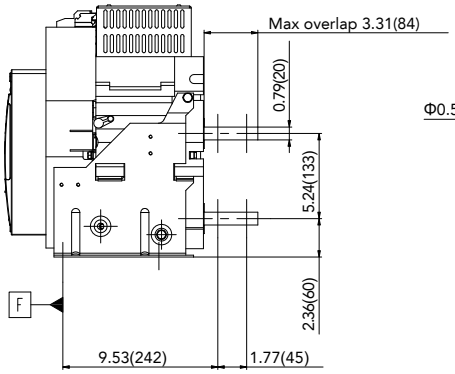

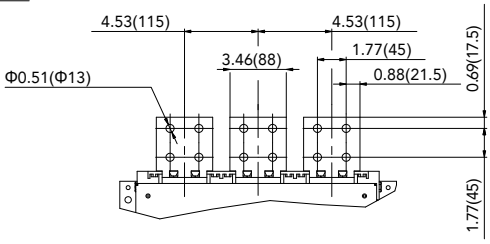

Installation Dimensions

Fixed type

A32-2000A/2500A 4P

Horizontal connection

in(mm)

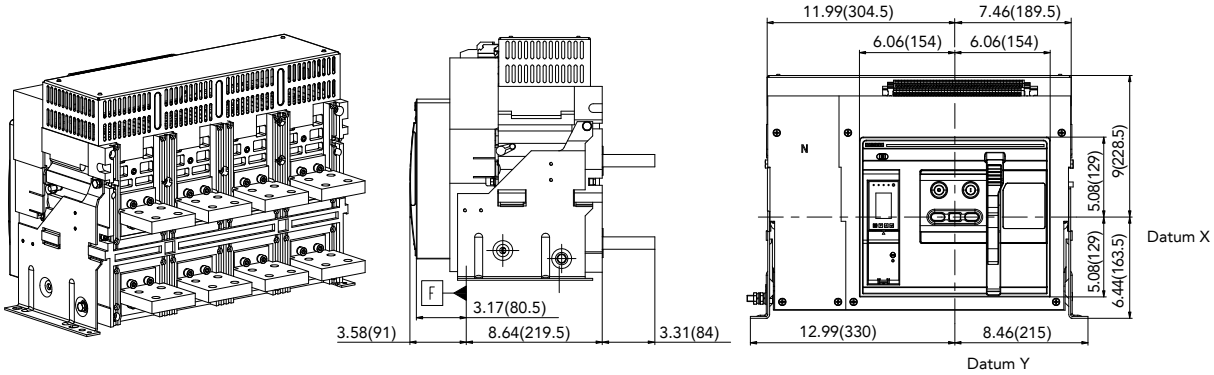

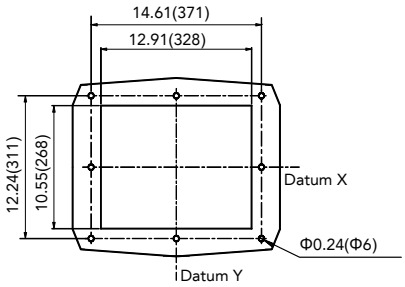

Panel perforating size

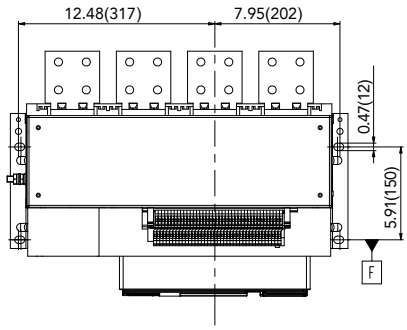

Product mounting hole

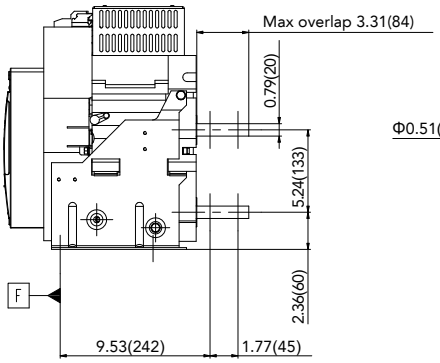

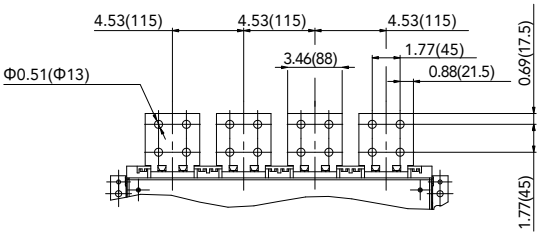

Installation Dimensions

Fixed type

A32-3200A 3P

Vertical connection

in(mm)

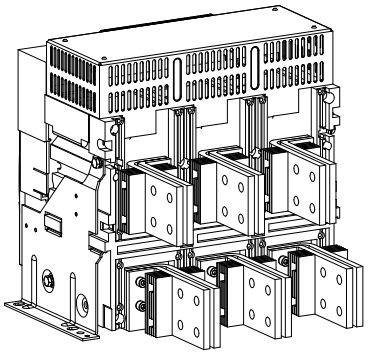

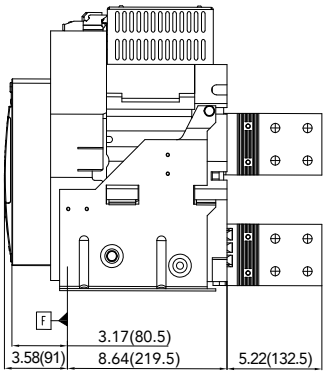

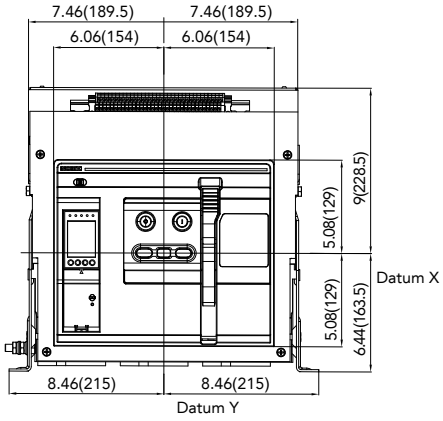

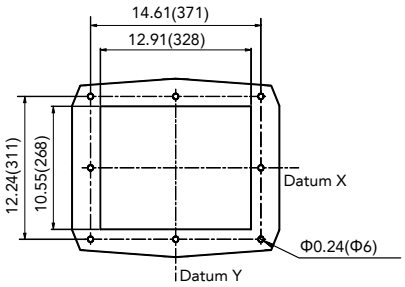

Panel perforating size

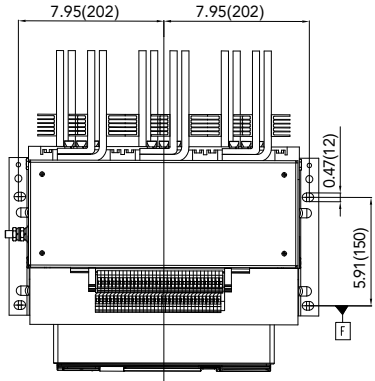

Product mounting hole

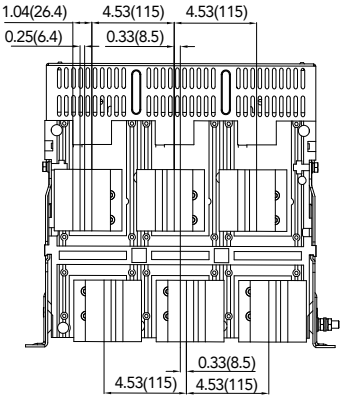

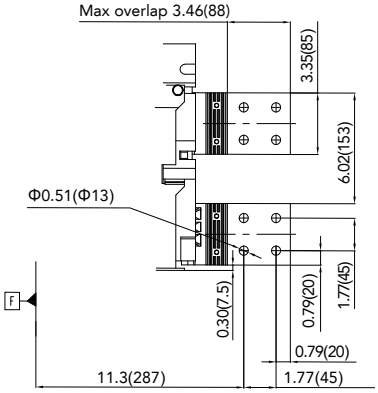

Installation Dimensions

Fixed type

A32-3200A 4P

Vertical connection

in(mm)

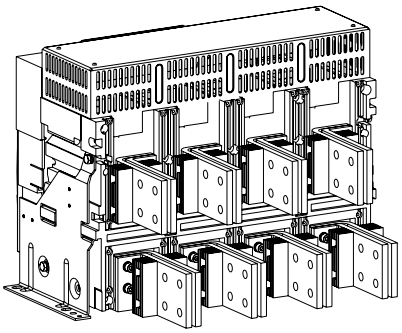

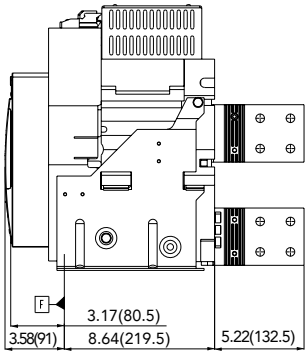

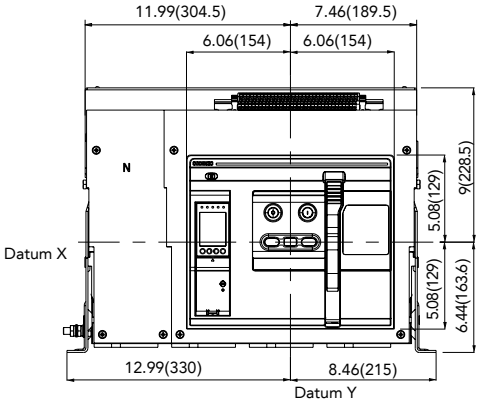

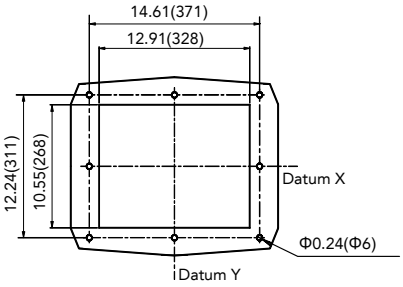

Panel perforating size

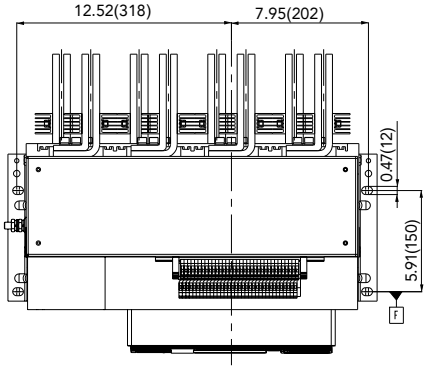

Product mounting hole

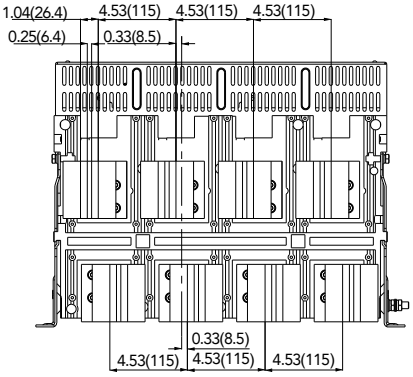

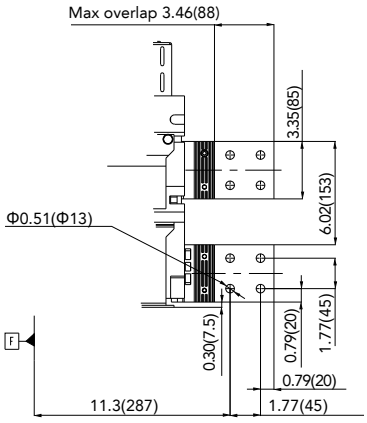

Installation Dimensions

Drawout type

A32-800A/1600A 3P

Vertical connection

in(mm)

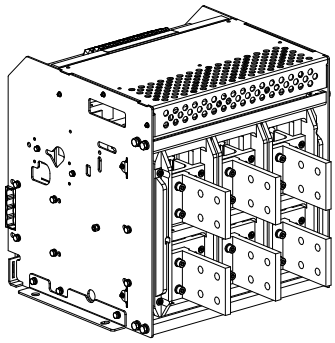

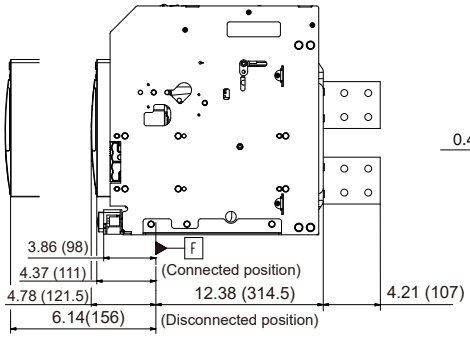

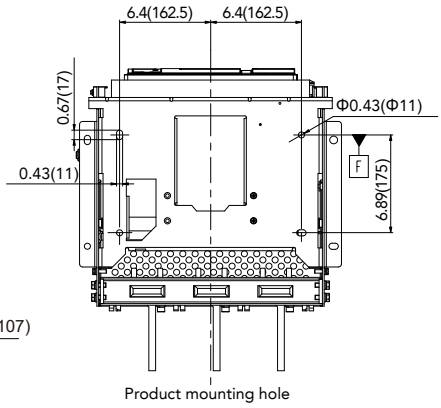

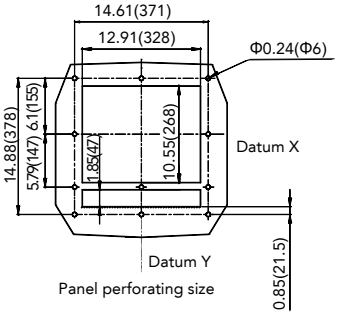

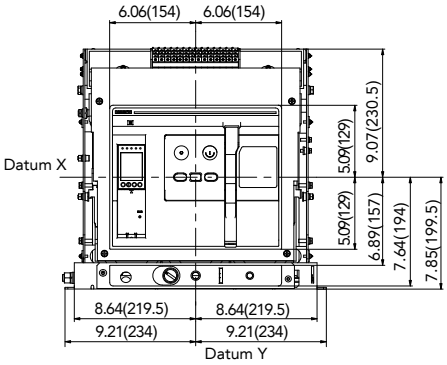

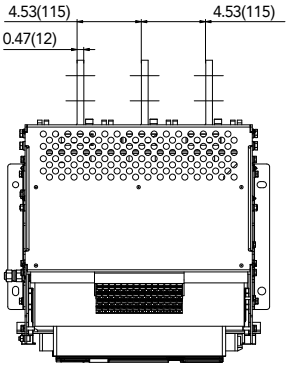

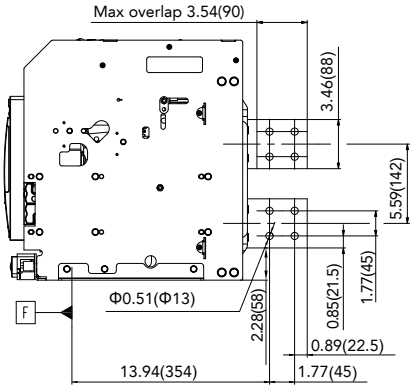

Installation Dimensions

Drawout type

A32-800A/1600A 4P

Vertical connection

in(mm)

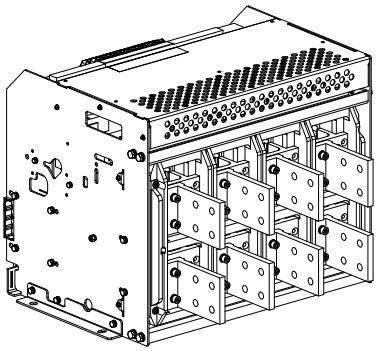

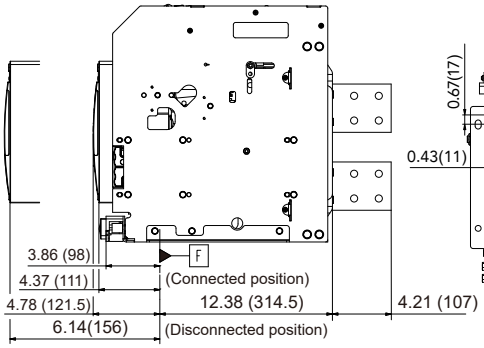

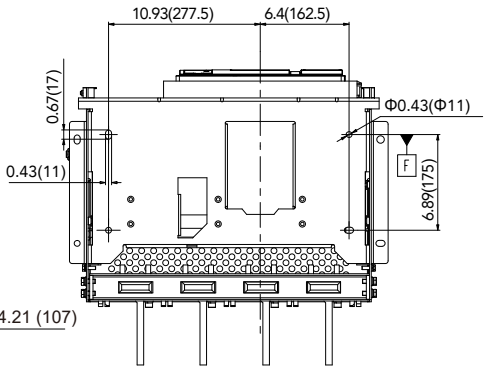

Product mounting hole

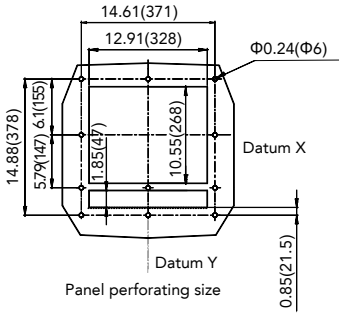

Panel perforating size

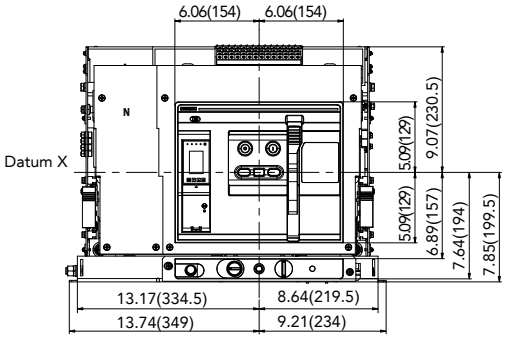

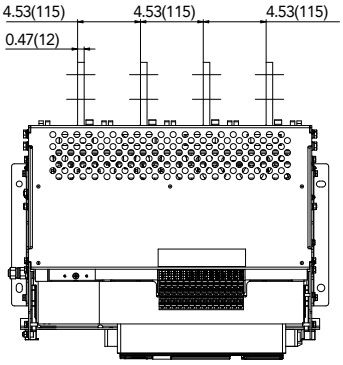

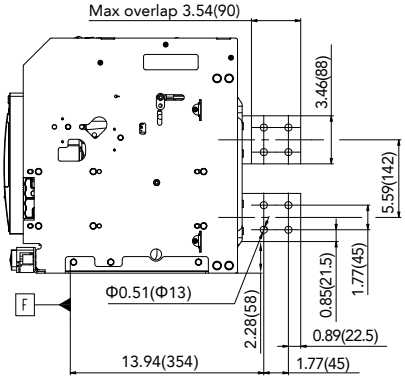

Installation Dimensions

Drawout type

A32-800A/1600A 3P

Horizontal connection

in(mm)

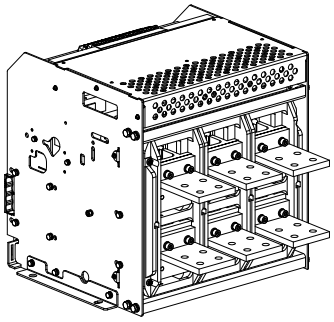

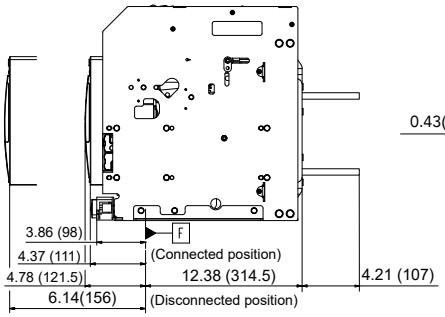

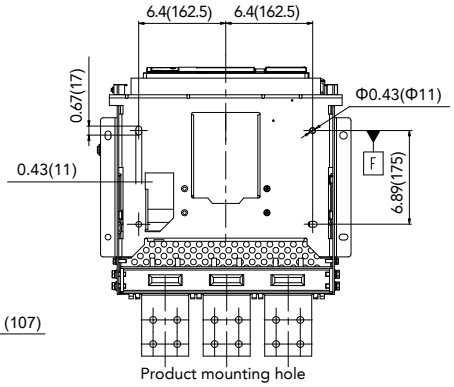

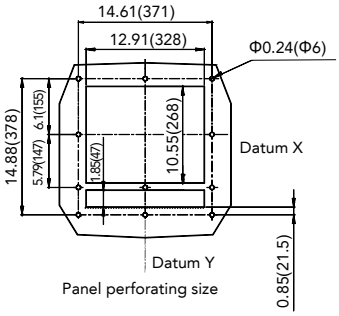

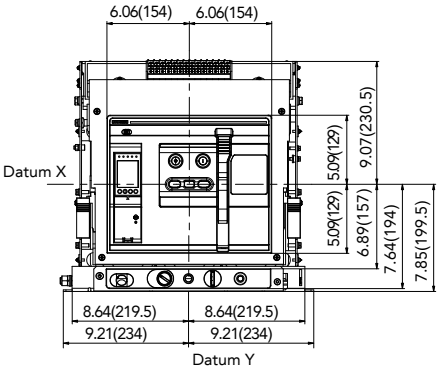

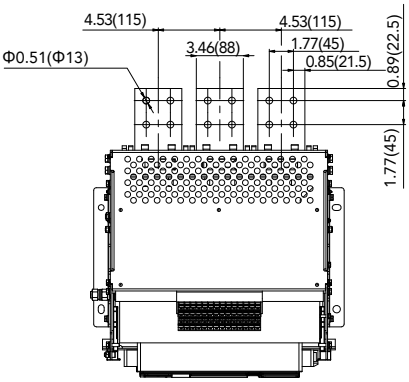

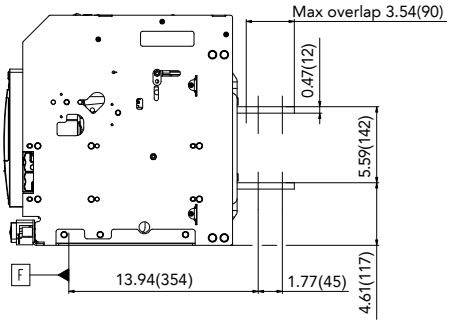

Installation Dimensions

Drawout type

A32-800A/1600A 4P

Horizontal connection

in(mm)

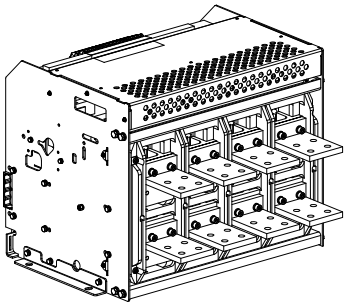

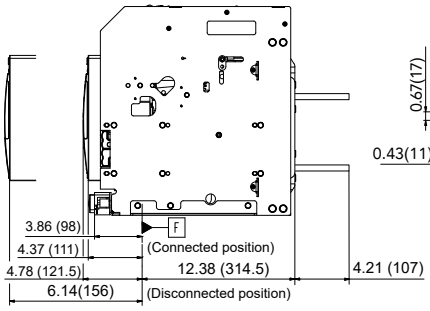

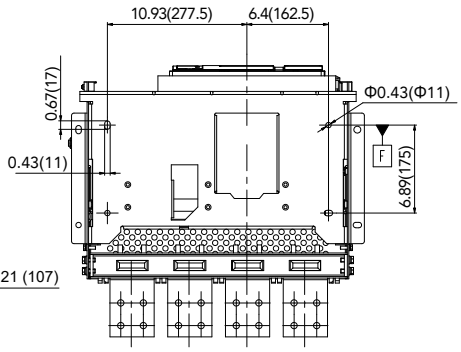

Product mounting hole

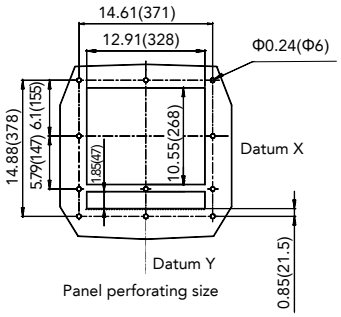

Panel perforating size

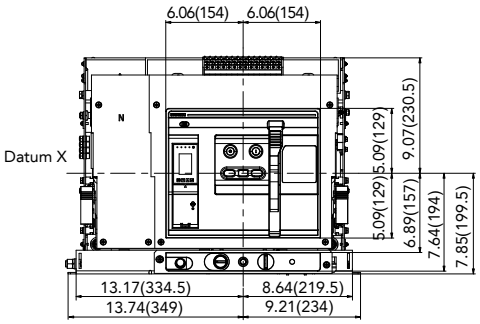

Datum Y

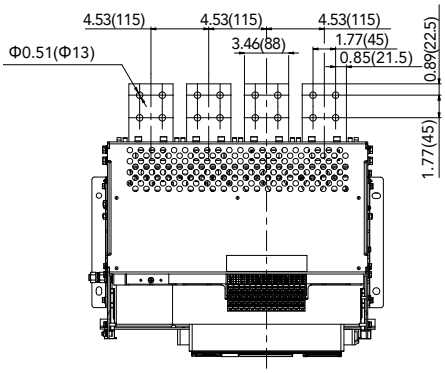

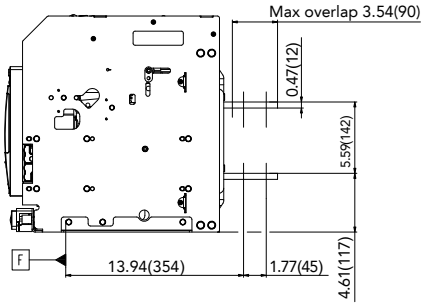

Installation Dimensions

Drawout type

A32-2000A/2500A 3P

Vertical connection

in(mm)

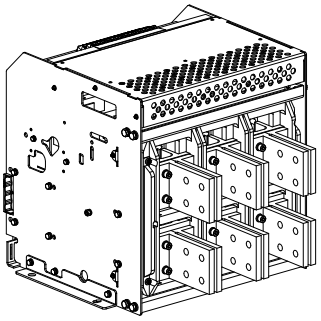

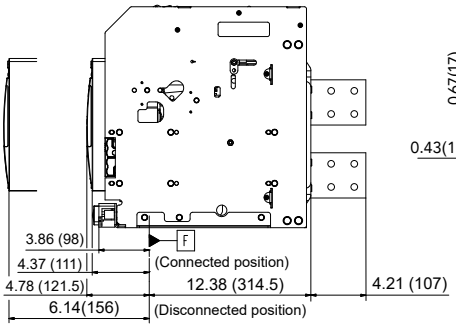

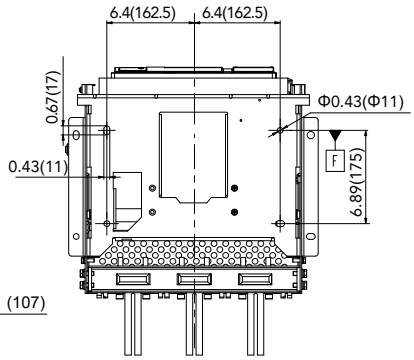

Product mounting hole

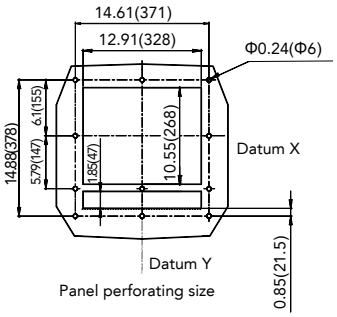

Panel perforating size

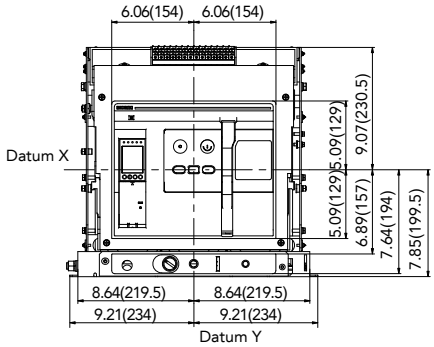

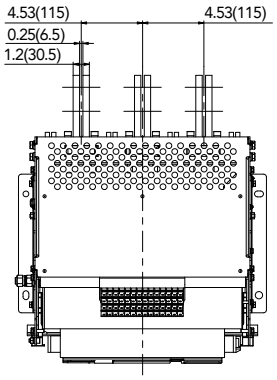

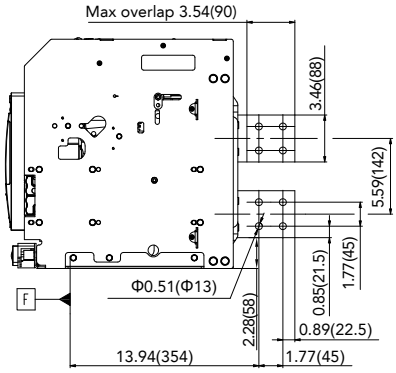

Installation Dimensions

Drawout type

A32-2000A/2500A 4P

Vertical connection

in(mm)

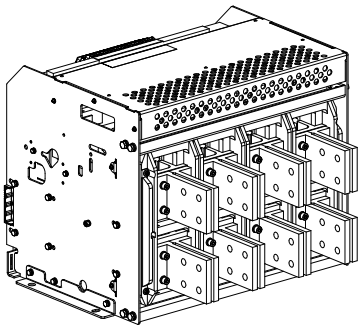

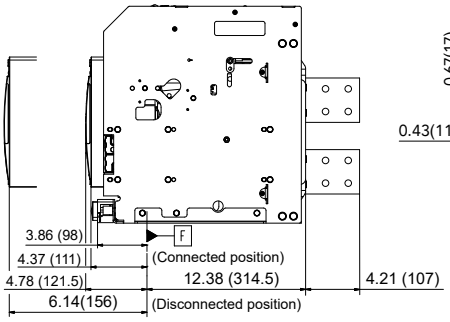

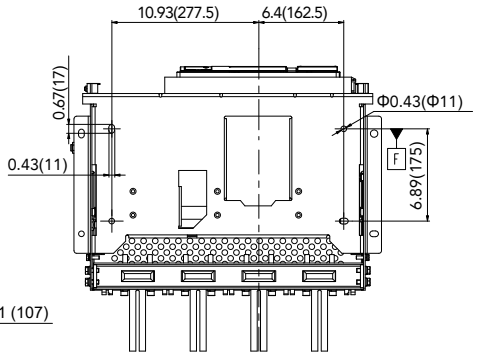

Product mounting hole

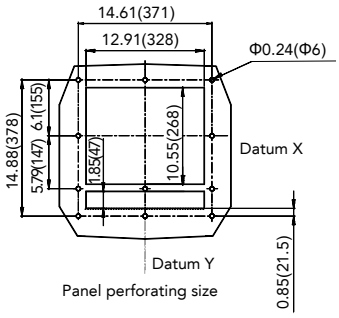

Panel perforating size

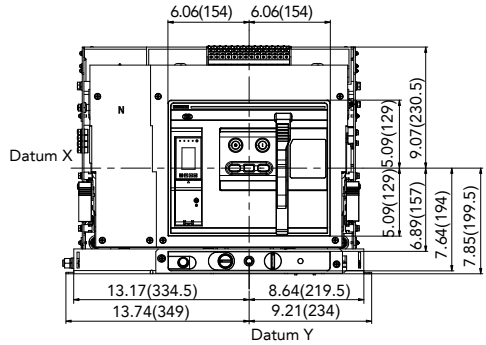

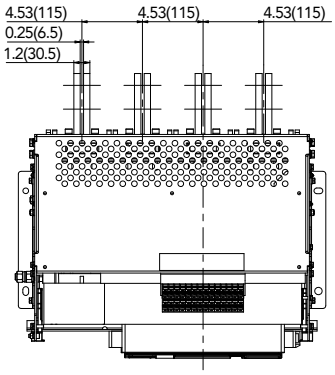

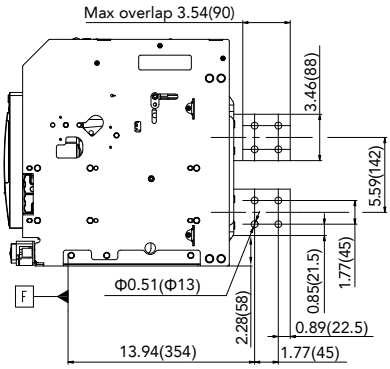

Installation Dimensions

Drawout type

A32-2000A/2500A 3P

Horizontal connection

in(mm)

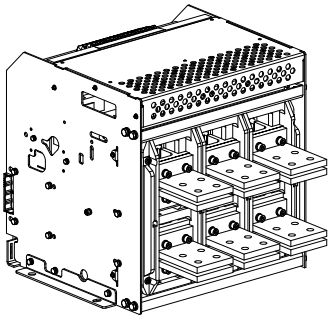

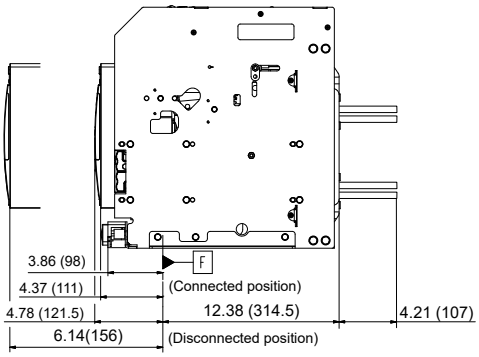

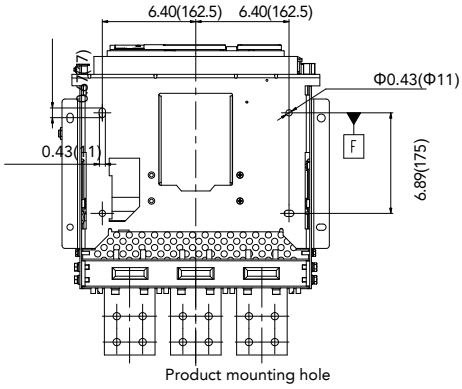

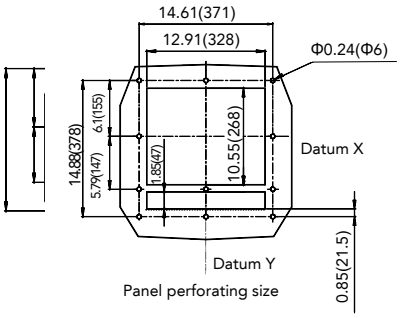

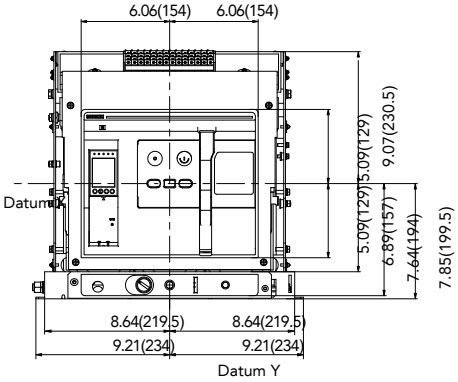

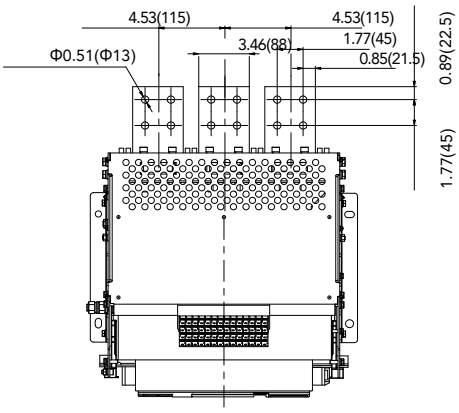

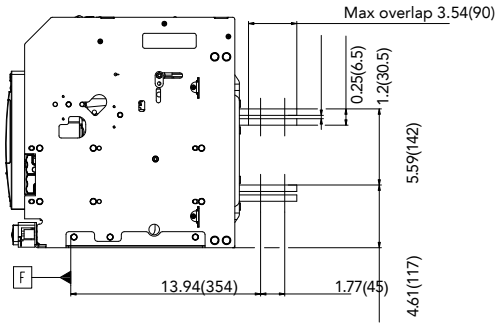

Installation Dimensions

Drawout type

A32-2000A/2500A 4P

Horizontal connection

in(mm)

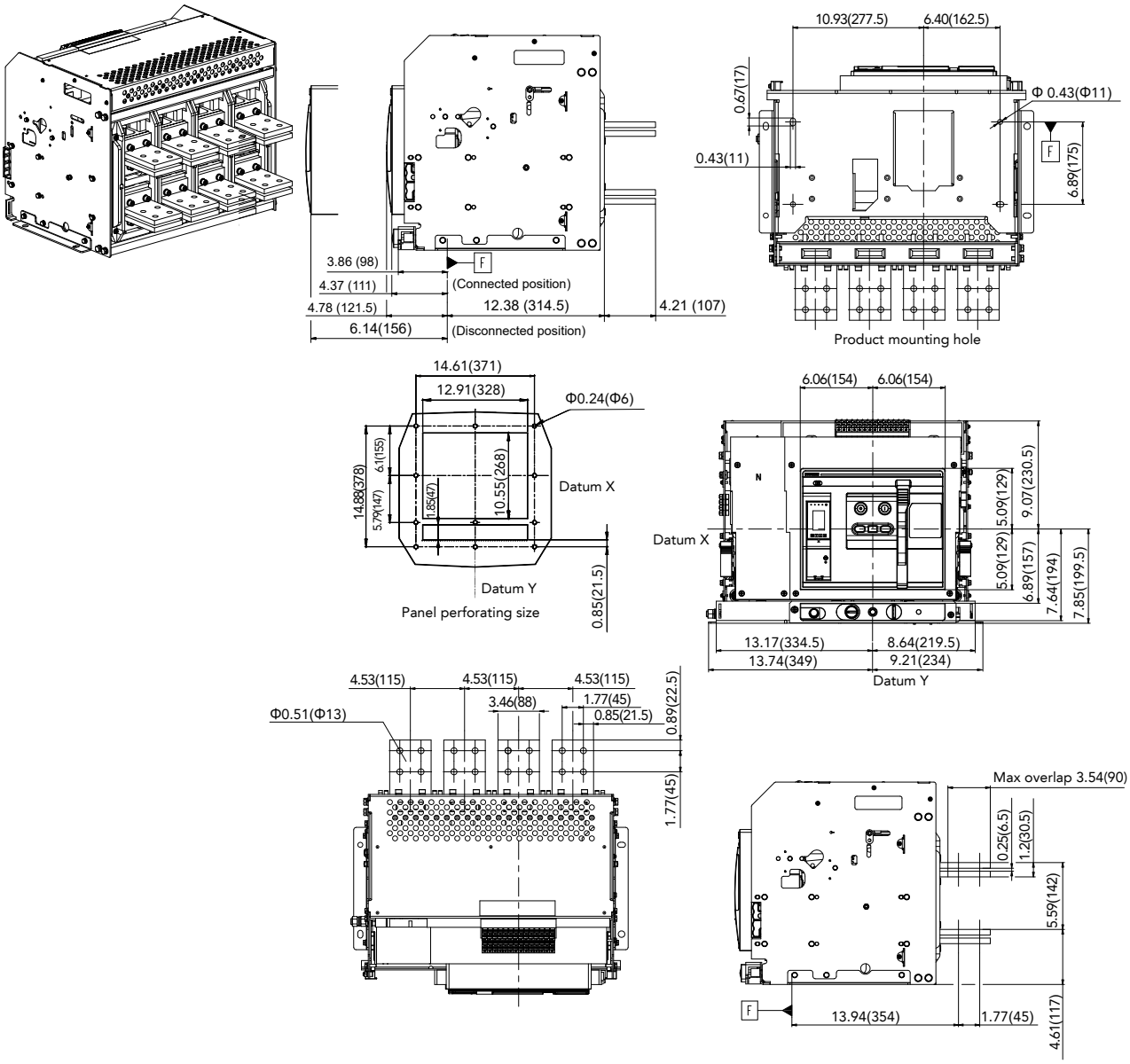

Installation Dimensions

Drawout type

A32-3200A 3P

Vertical connection

in(mm)

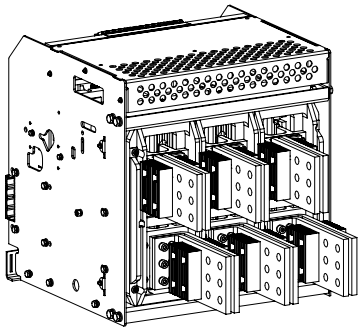

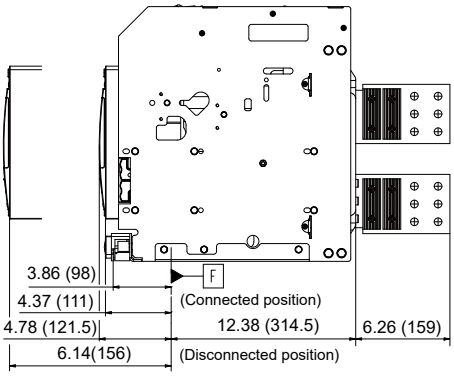

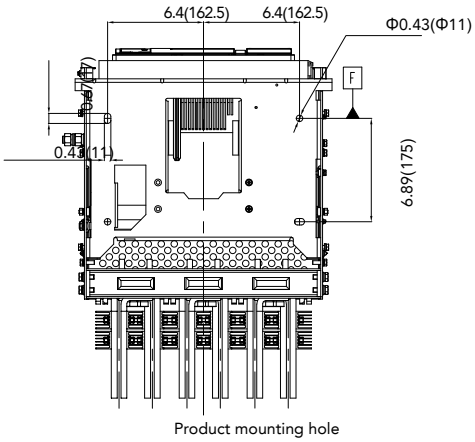

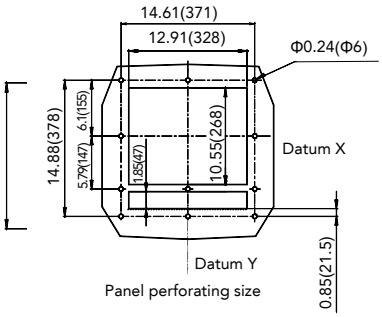

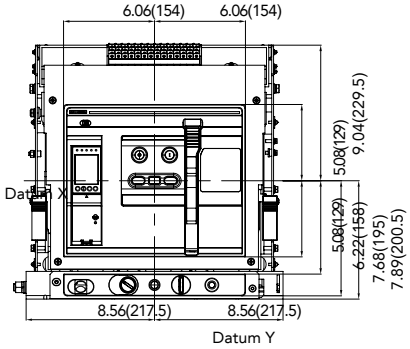

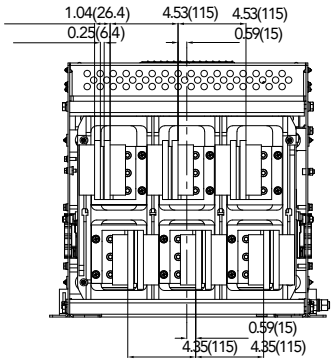

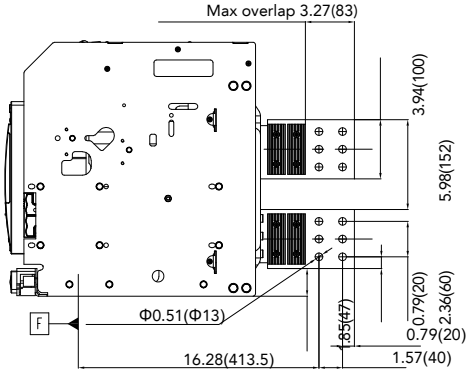

Installation Dimensions

Drawout type

A32-3200A 4P

Vertical connection

in(mm)

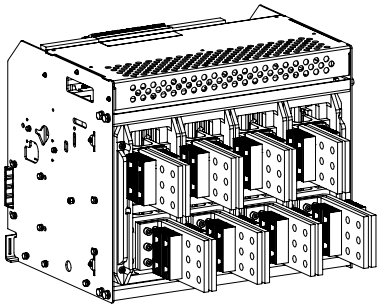

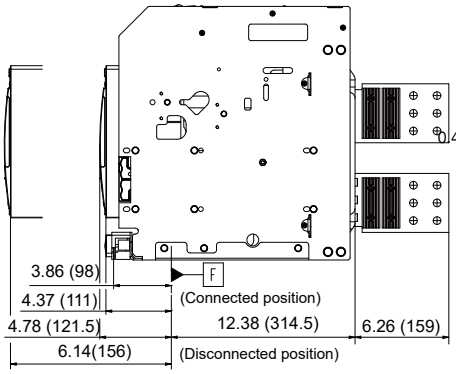

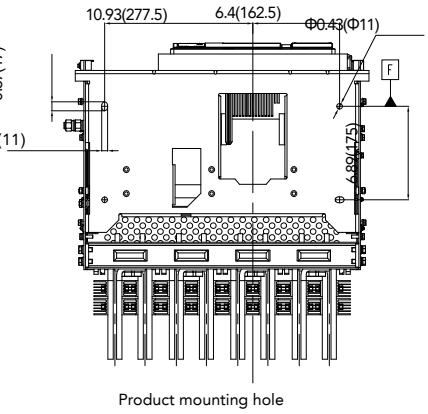

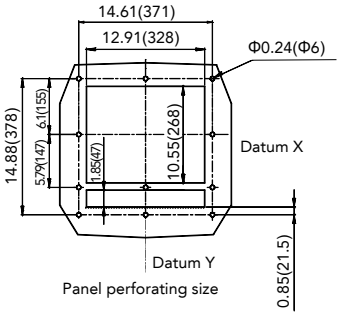

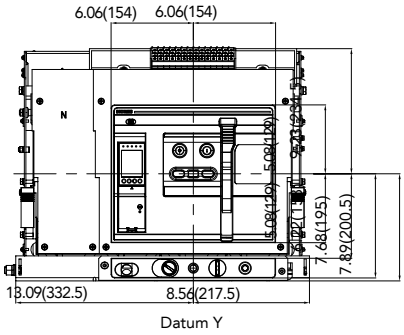

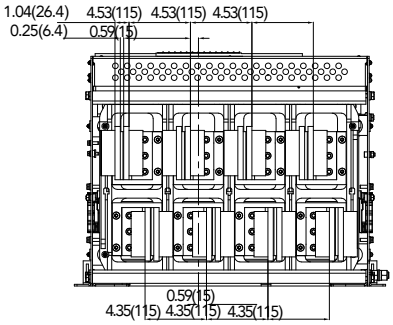

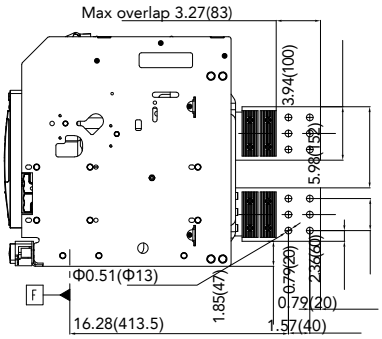

Installation Dimensions

Fixed type

A40-4000A 3P

Vertical connection

in(mm)

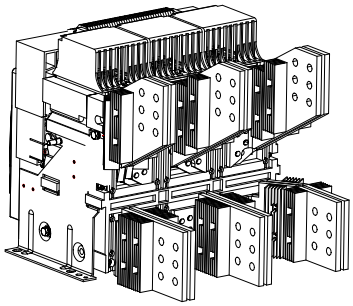

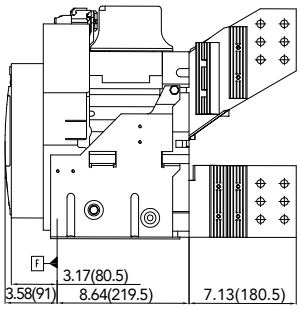

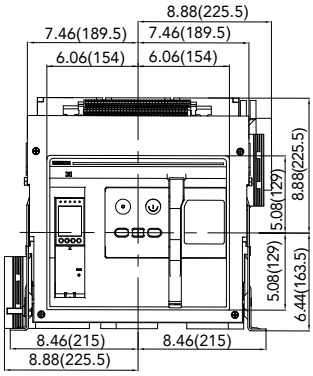

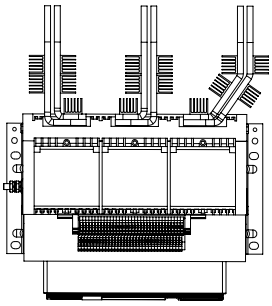

Upper Busbar

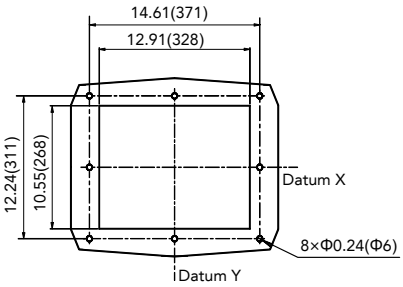

Panel perforating size

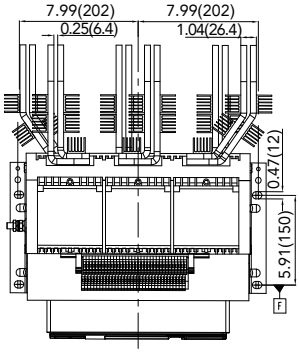

Product mounting hole

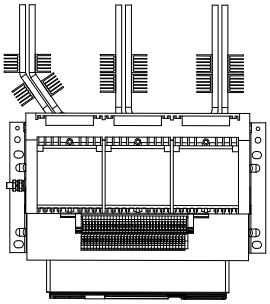

Lower Busbar

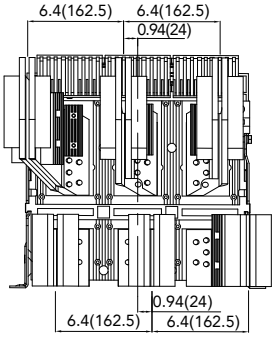

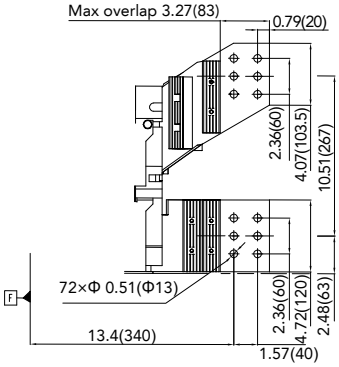

Installation Dimensions

Fixed type

A40-4000A 4P

Vertical connection

in(mm)

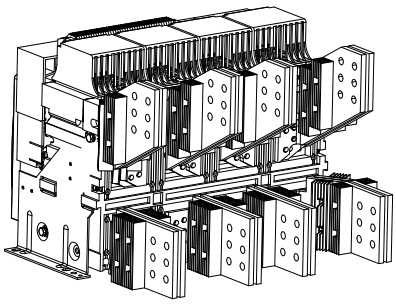

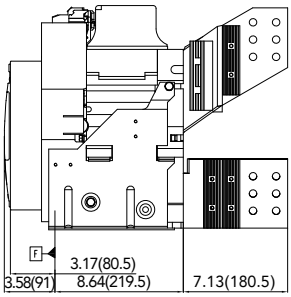

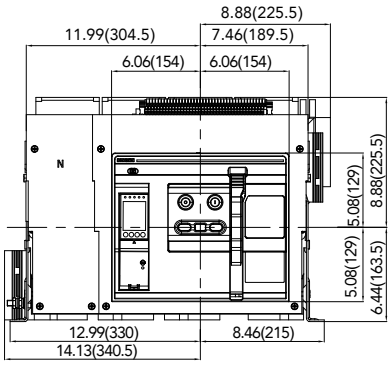

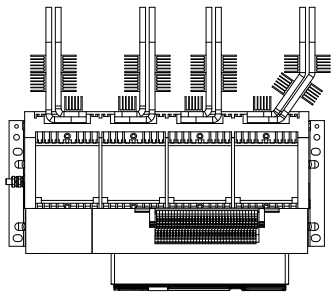

Upper Busbar

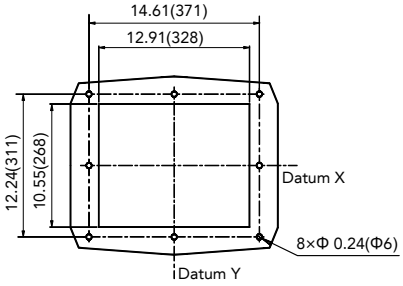

Panel perforating size

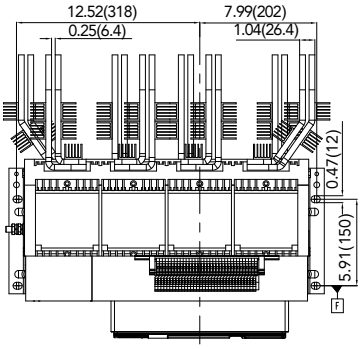

Product mounting hole

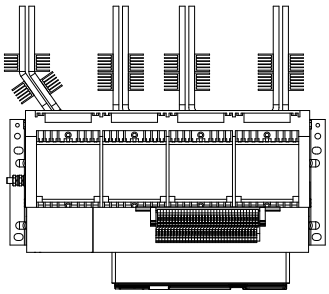

Lower Busbar

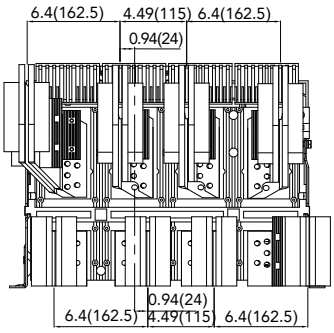

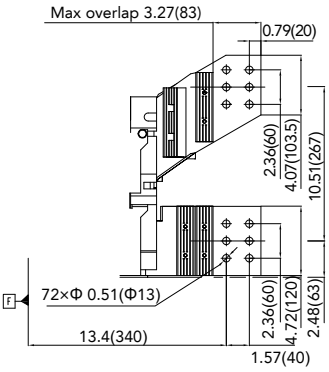

Terminal Adjustment

Terminals are adjustable in field

Horizontal terminals	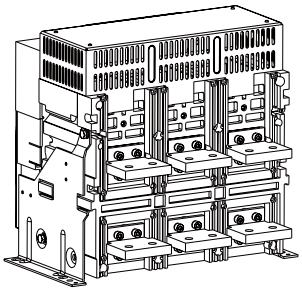	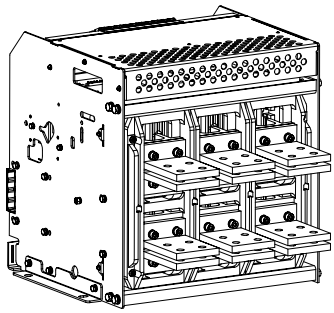
Mixed terminals	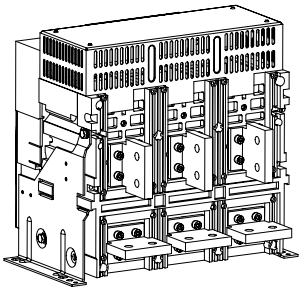	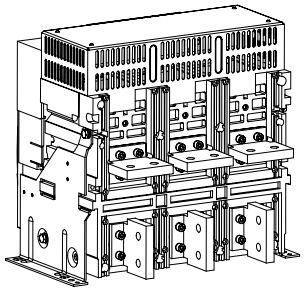
	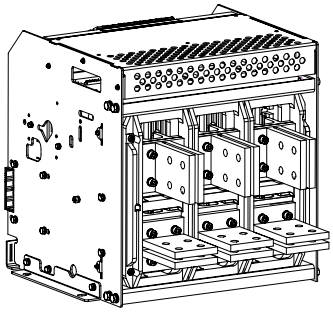	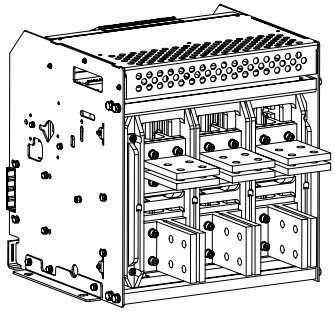
Vertical terminals	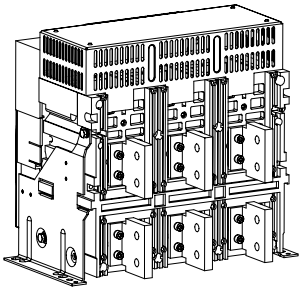	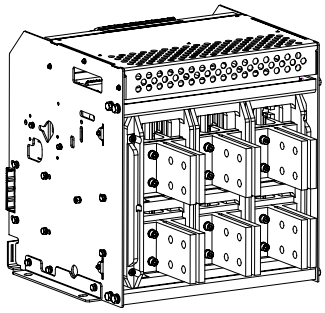

Terminals Adjustment	Model	A25					A32			
	Rating/A	600	800	1200	1600	2000	800	1600	2000	2500

Terminal Adjustment

Tools	4mm Allen Wrench	6mm Allen Wrench	Limit Clamp
Picture			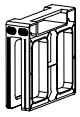

Single terminal

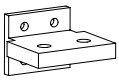

1.Screw out the fasteners on the terminal

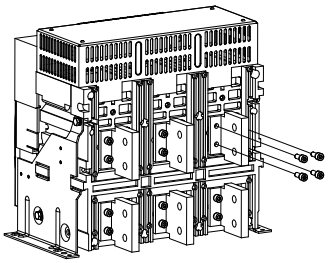

2.Rotate the terminals by 90 degrees

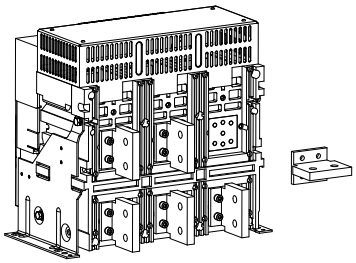

3.Screw in the fasteners with the correct torque, 15-17N.m pref

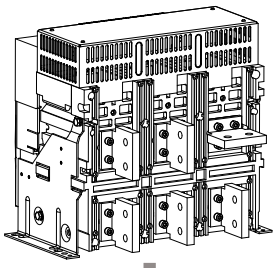

4.Completed

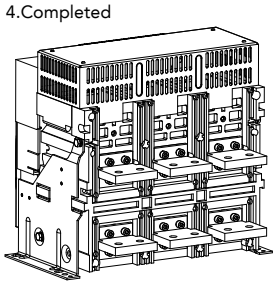

Double terminal

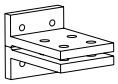

1.Screw out the fasteners on the terminal

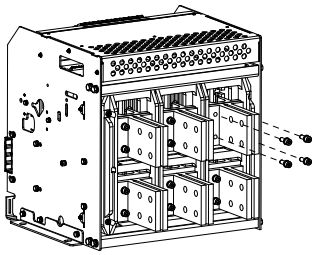

2.Rotate the terminals by 90 degrees

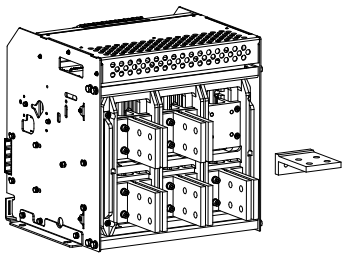

3.Screw in the fasteners with the correct torque, 15-17N.m pref

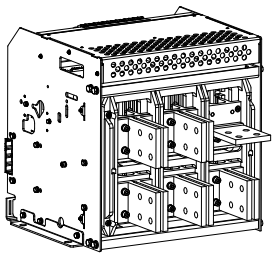

4.Use the fixture to fix and install another terminal

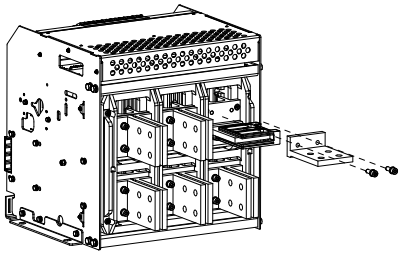

5.Screw in the fasteners with the correct torque, 15-17N.m pref

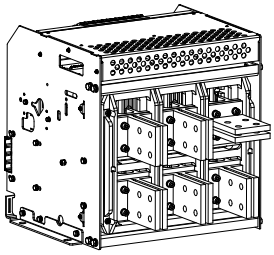

6.Completed

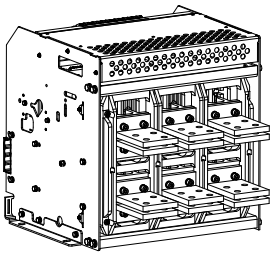

Terminal Spacing Adjustment

Tools	4mm Allen Wrench	6mm Allen Wrench	Limit Clamp
Picture			

Model	A32		
Rating/A	2000	2500	3200

①Remove the inner heat sink

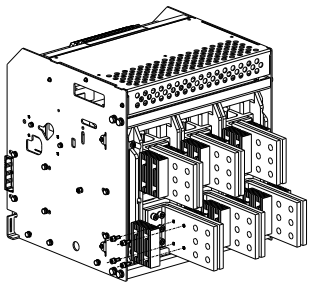

②Remove the bus bar screws
No need to remove the external heat sink

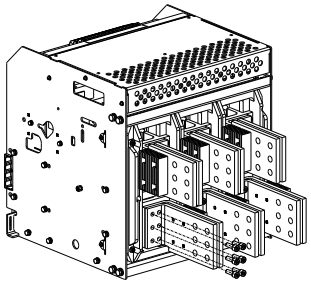

③Remove the bus bar in sequence

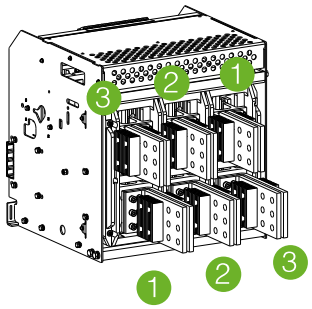

④Finished

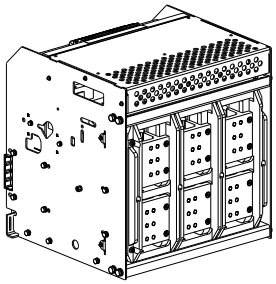

⑤Mounting fixture

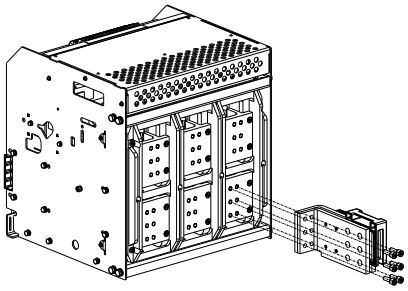

⑥Install the bus bar and lock the screws with tightening torque (15~17)N.m

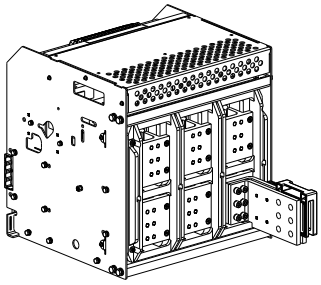

⑦Install heat sink

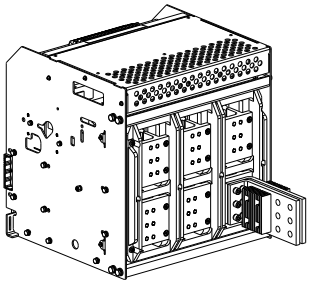

⑧Install the bus bar in sequence

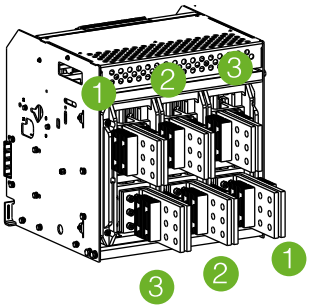

Accessories

External current transformer for Neutral/RCT−1800−COIL & NCT

RCT-1800-COIL

NCT

Tools	6mm Allen Wrench	8mm Allen Wrench	10mm Allen Wrench	Screwdriver
Picture				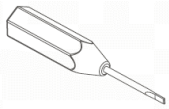

Model	Terminal	NCT	RCT-1800-COIL
A25	#25 & #26	NCT11N	RCT-1800-COIL 11
A32&A40	#28 & #29	NCT12N	RCT-1800-COIL 12

External current transformer for neutral conductor.
An external transformer for N-pole protection of three-pole circuit breakers in four-wire network, installed on the neutral conductor, the current transformer enable measurement and protection of the neutral conductor.

Note:
- External neutral protection for three poles breaker only.
- NCT & RCT-1800-COIL cannot be selected at the same time.

Dimensions

in(mm)

RCT-1800-COIL

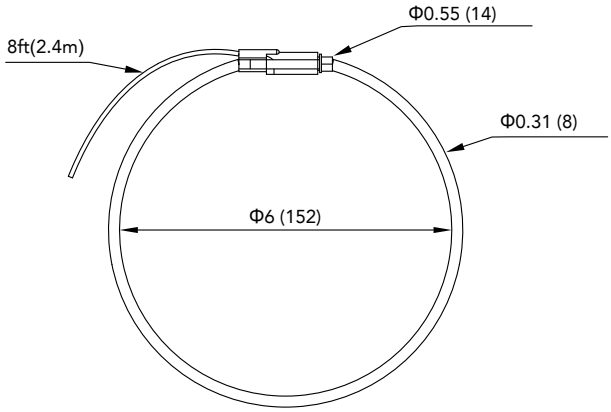

NCT11N

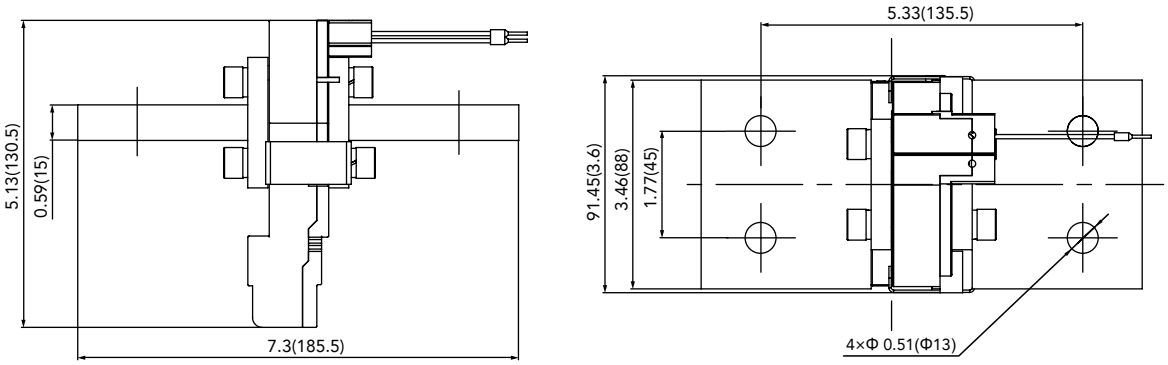

Accessories

NCT12N

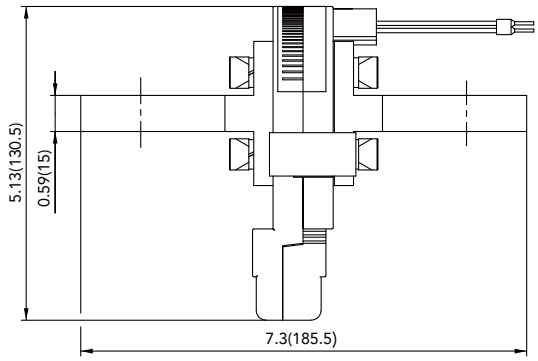

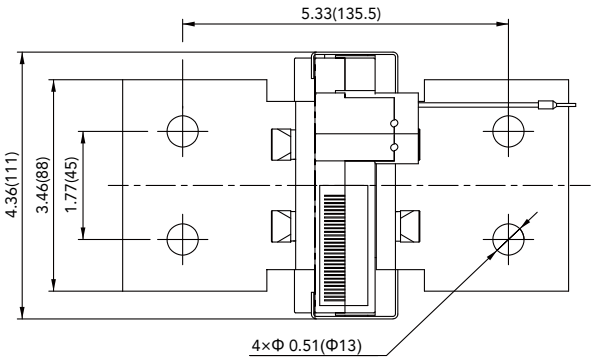

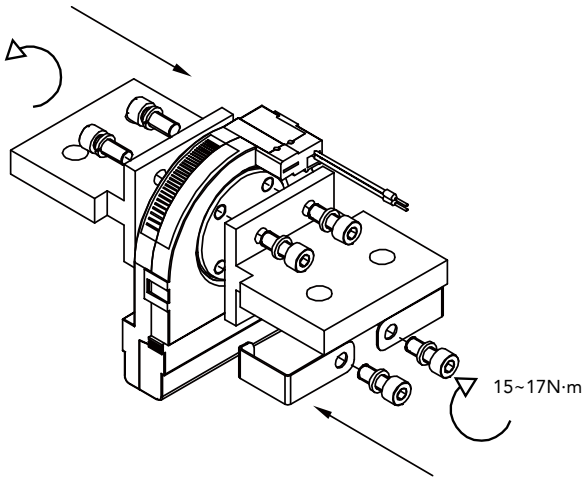

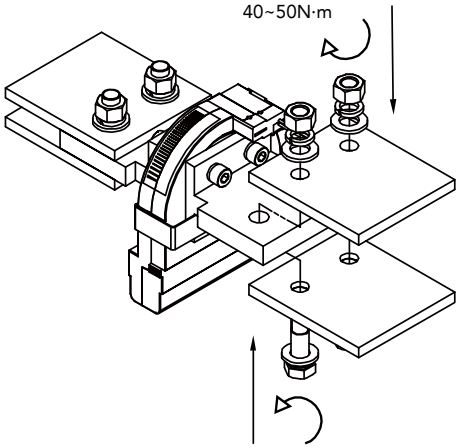

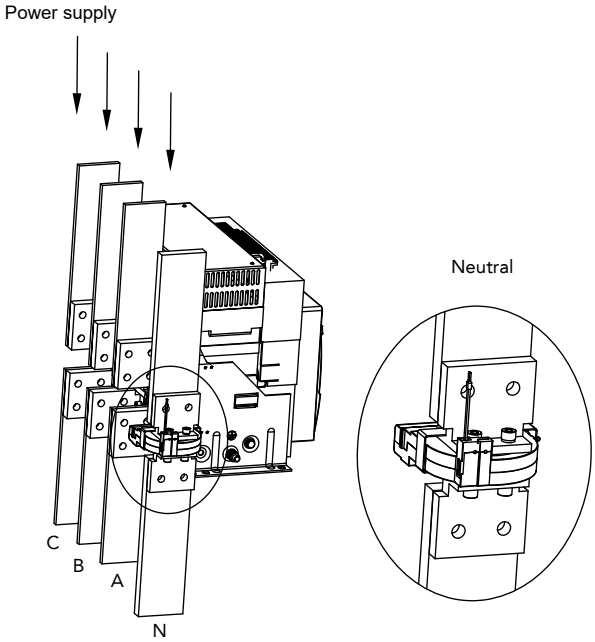

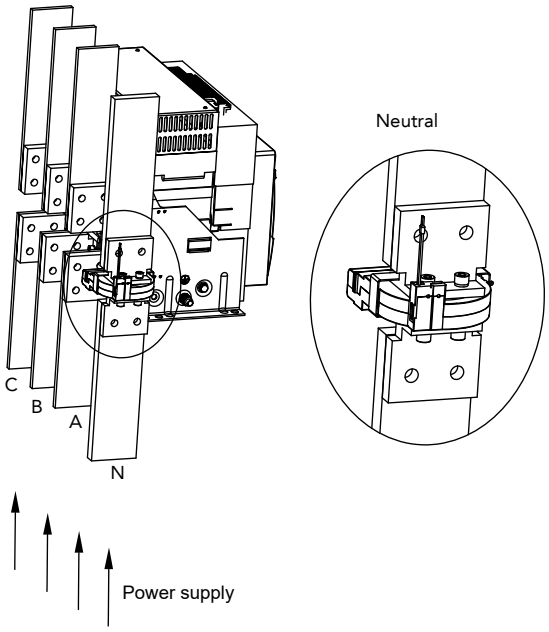

Accessories

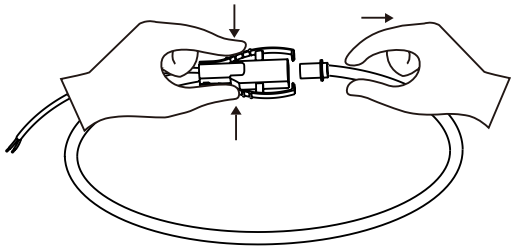

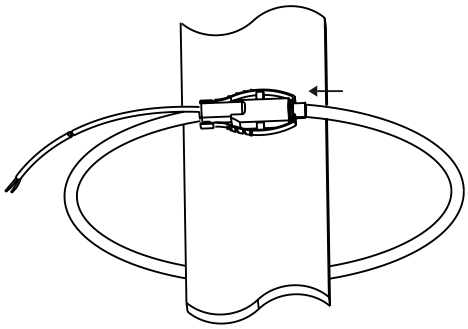

Power supply

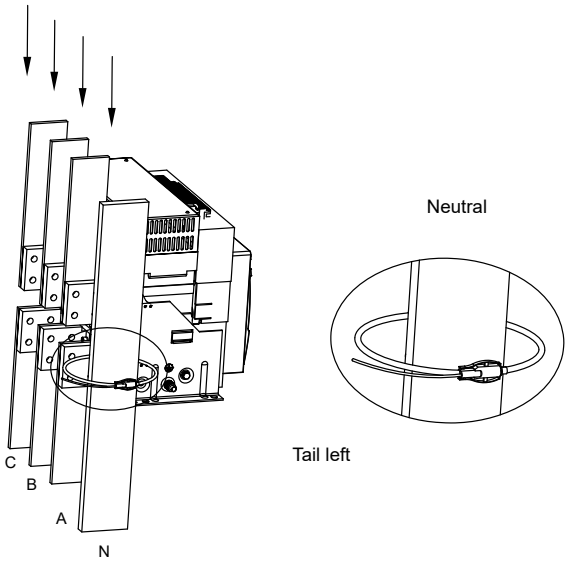

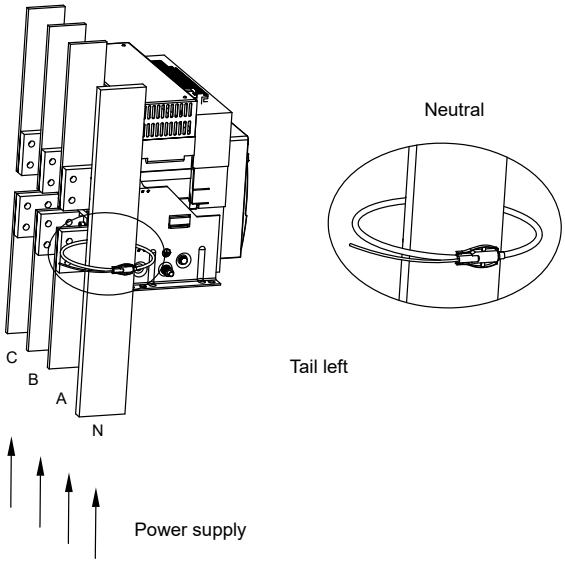

Wiring diagram

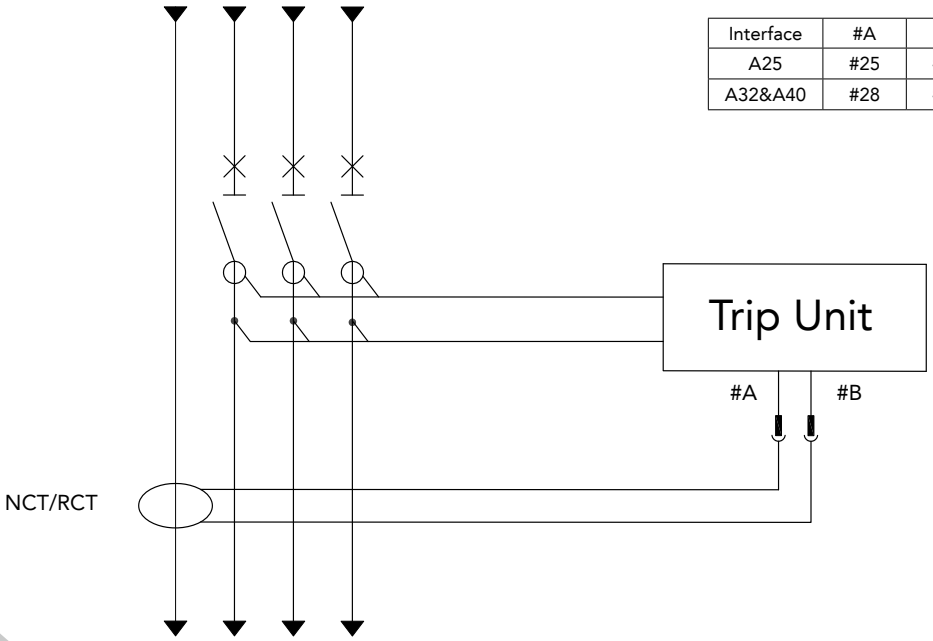

Interface	#A	#B
A25	#25	#26
A32&A40	#28	#29

Accessories

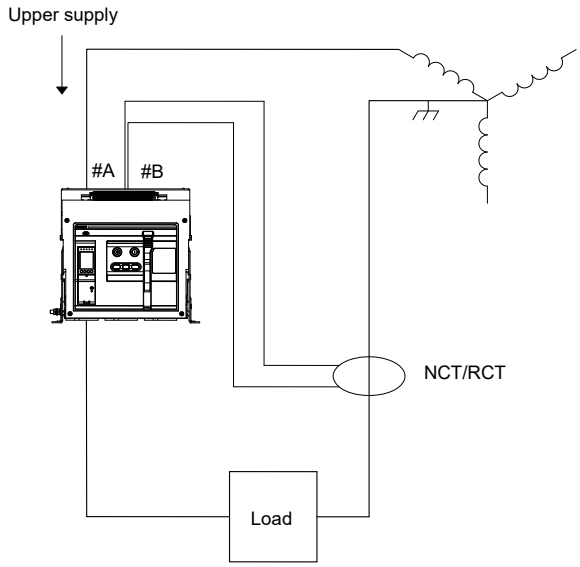

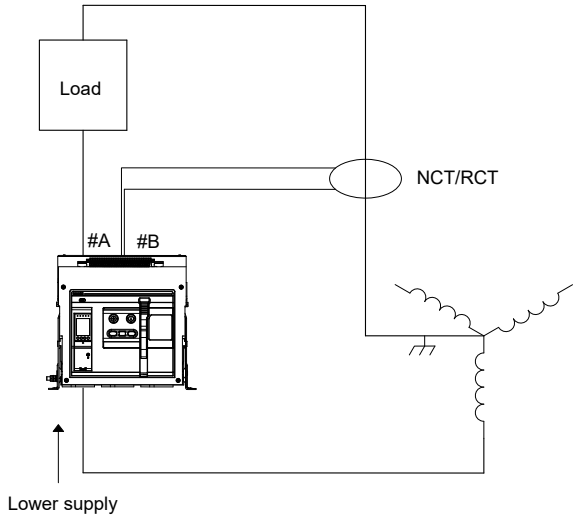

Accessories

Energy−limiting maintenance switch/ELM10

ELM10 is used to mitigate arc hazards and protect personal safety during product maintenance. It should be used in coordination with Power Circuit Breakers with ARMS protection function.

Note:
ARMS (Arc flash reduction maintenance mode settings). Set via the trip unit menu, the setting is located in the "Maintain" submenu.

Ambient temp(℃)	-20℃ ~ +70℃
Atmospheric conditions of humidity and heat	Relative humidity can be up to 90% at +20℃ and should not exceed 50% at +40℃
Pollution class	Class 3
Installation category	Ⅱ
Rated voltage Ue(V)	AC480V/DC24 Refer to Page 68 1)
Rated frequency (Hz)	50/60
Enclosure protection degree	IP40
Electrical/mechanical endurance(times)	1500
Applicable trip unit	H type
Applicable software version	0.91 or higher

Dimensions

in(mm)

ELM10

Front View

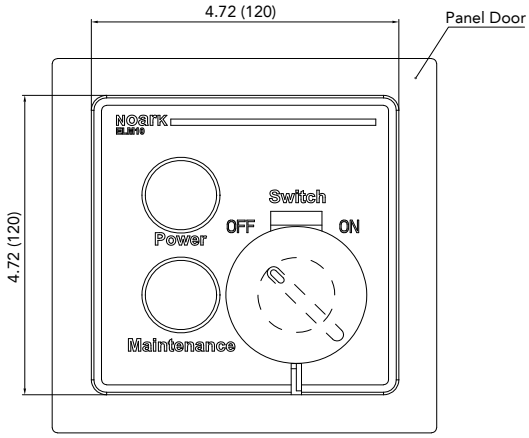

Side View

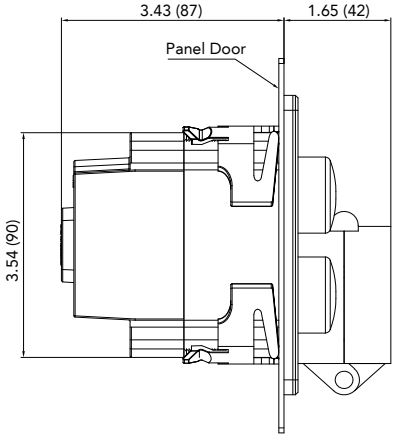

Back View

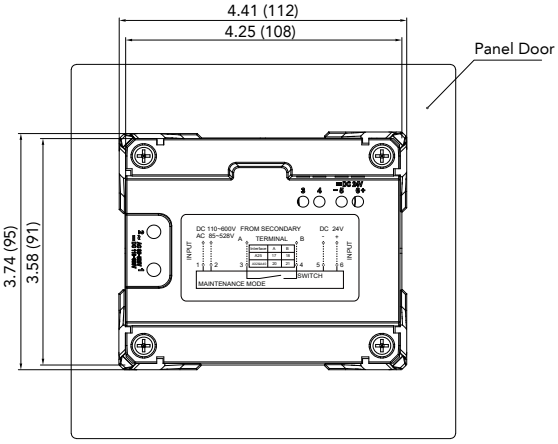

Mounting Hole

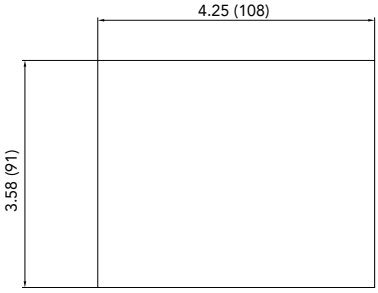

Accessories

Assembling

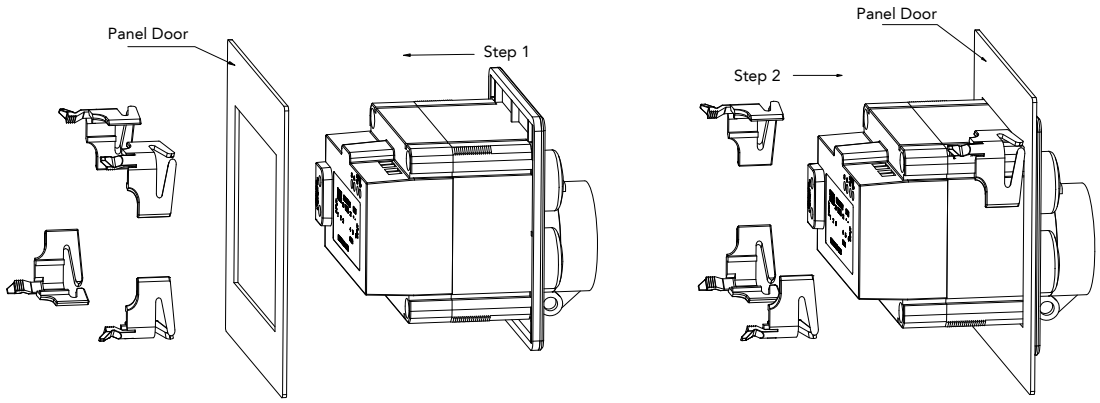

Method of application

1). ELM10 requires an external power supply. ELM10 has two power inputs, terminal #1 and #2 can be connected to 85-528VAC or 110-600VDC, while terminal #5 and #6 can be connected to 24VDC. Use only one of the listed as input power supply.

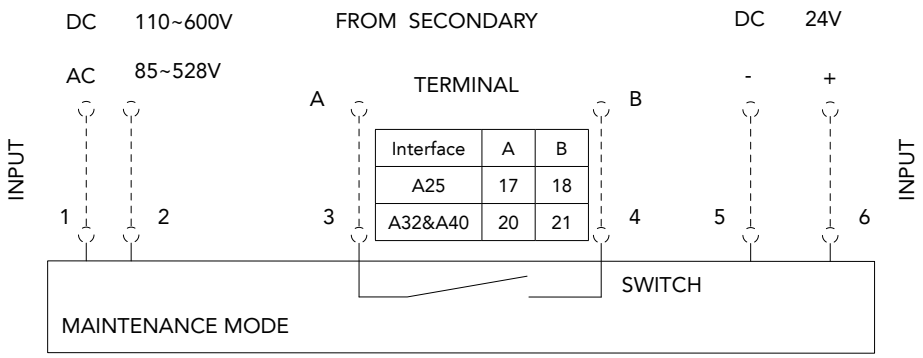

Interface	A	B
A25	17	18
A32&A40	20	21

2). Terminal #3 and #4 are signal outputs.When connecting to A25 please connect terminals #17 and #18 respectively. When connecting to A32 & A40 please connect terminals #20 and #21 respectively.

3). Set the trip unit to ARMS mode, the operation is as follows.

i) Press Enter to go Settings,

ii) Select “System set” from the option.

iii) In the System set submenu, select DI/DO

iv) From DI/DO submenu, select DI1

v) Set DI1 to ARMS mode.

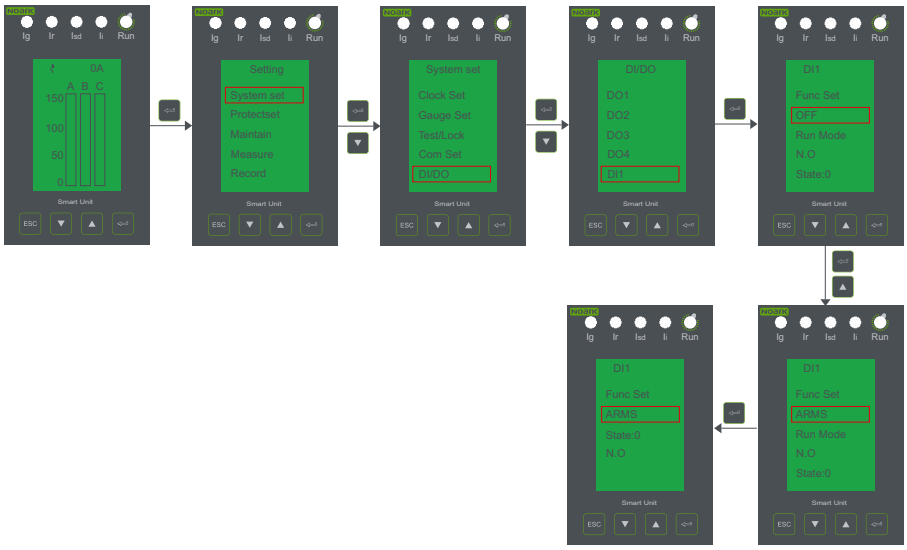

vi) If the DI1 has been previously set to fault trip, Alarm, or ZSI function, set DI1 to OFF first before setting it to ARMS mode. The operation is as follows.

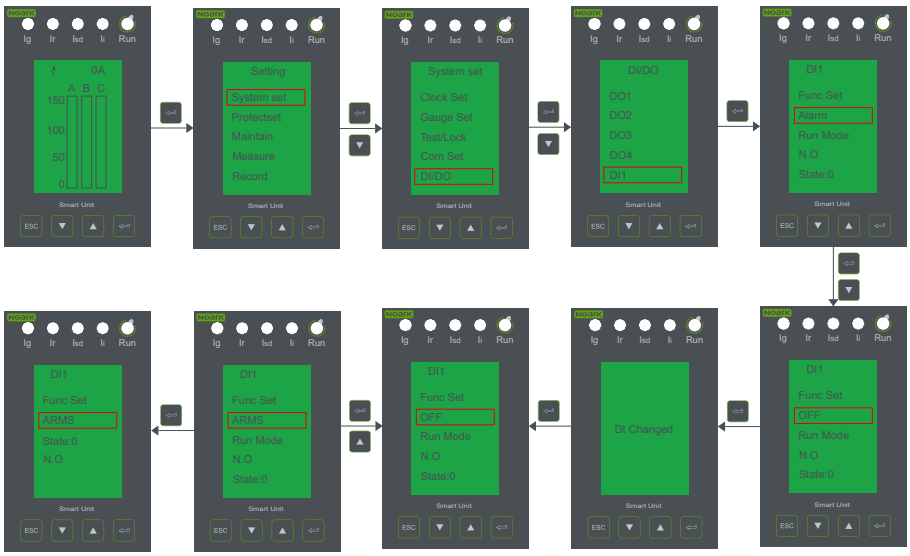

4). Power on the ELM10 using any of the input power supply listed in (1), the power indicator light (red) should come on. Then engage the ARMS function by using the selector switch in front. The ELM10's blue indicator light comes on while the backlight of trip unit changes from green to cyan, and the Instantaneous fault indicator "Ii"light flashes every two seconds.

Note: When the trip unit has a warning signal, the backlight will be preferentially displayed in yellow. Only after the trip unit releases the alarm can its backlight be displayed in cyan.

5). The default instantaneous protection value is 2In under ARMS mode, the protection value can be changed by keys, the operation is as follows:

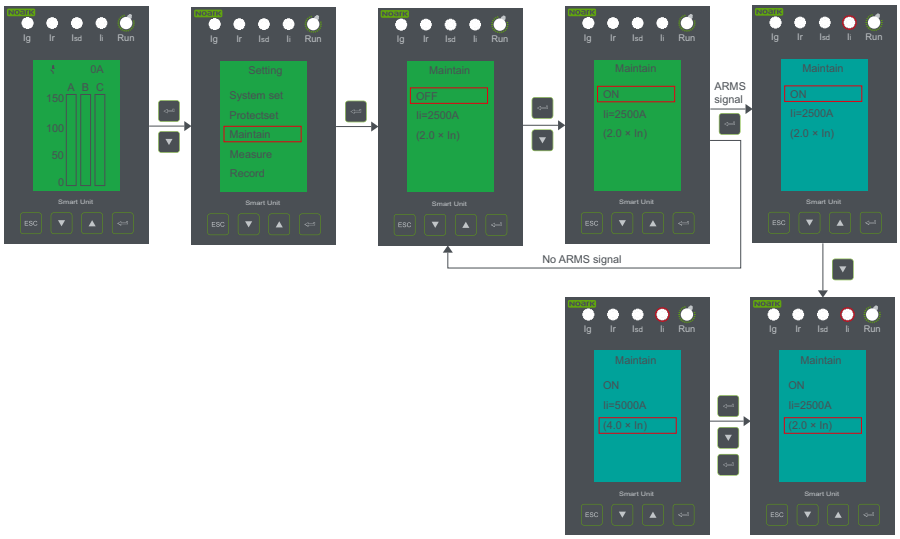

6). After maintenance work is completed by personnel, ELM10 switch can be turned OFF, ensuring the circuit breaker returns to its normal protection mode.

When DI1 needs to be set to other functions or turned off, the operation is as follows.

Note: It is forbidden to cancel the ARMS function when there's ARMS signal input.
ELM10 will not be able to enable ARMS function after DI is turned off.

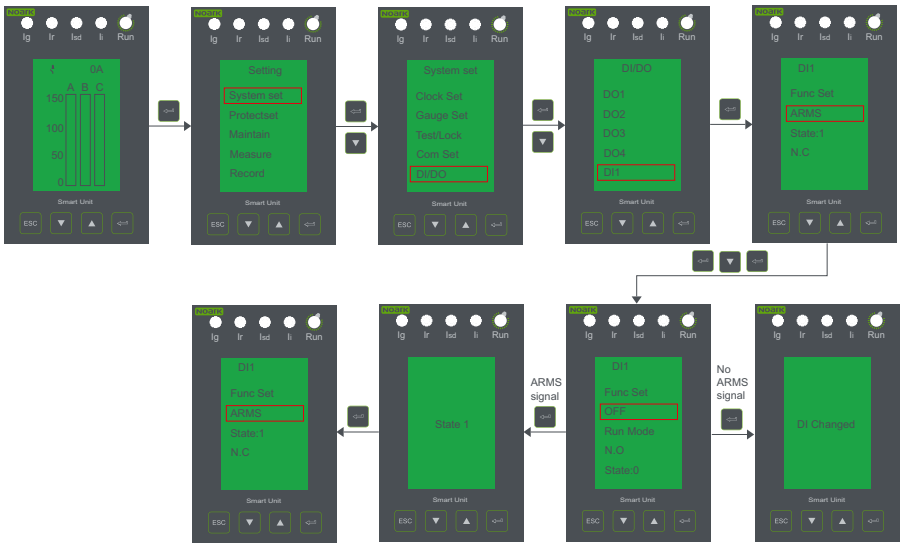

Note: For more information on ARMS function applications, please refer to the controller manual appendix - Introduction to Arc Flash Reduction Maintenance Mode.

Accessories

Voltage Conversion Module/VCM10

The trip unit of A series breakers voltage inputs used for the voltage and power measurements are up to 635 Vac, the voltage conversion module VCM10 is used to pick up the power circuit voltage signal and reduce the voltage.
The module inputs are connected to power circuits A, B, C, N (either from the top side or the bottom side of the circuit breaker), and the module output terminals # Ⅰ, # Ⅱ, # Ⅲ, and # Ⅳ are connected to the control circuit terminals of the circuit breaker.

Voltage input	0-1500VAC
Power consumption	< 1W
Installation	35mm Din-rail
Applicable trip unit	H type
Applicable software version	0.92 or higher

Note:
VCM10 is mandatory for voltages higher than 635 Vac and the type H trip unit is selected.

Wiring diagram

3P

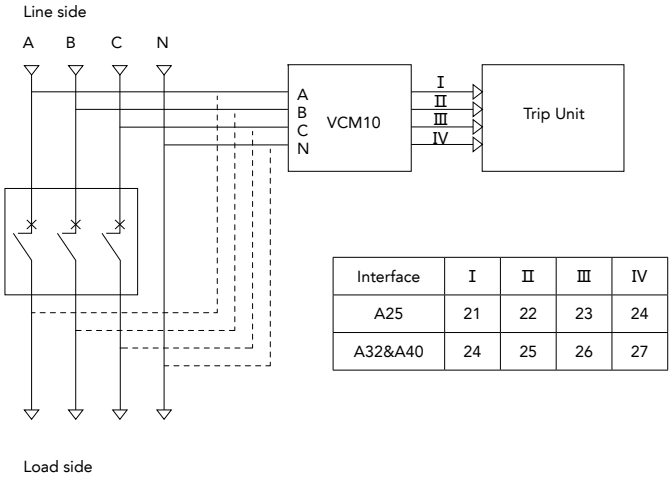

Interface	Ⅰ	Ⅱ	Ⅲ	Ⅳ
A25	21	22	23	24
A32&A40	24	25	26	27

4P

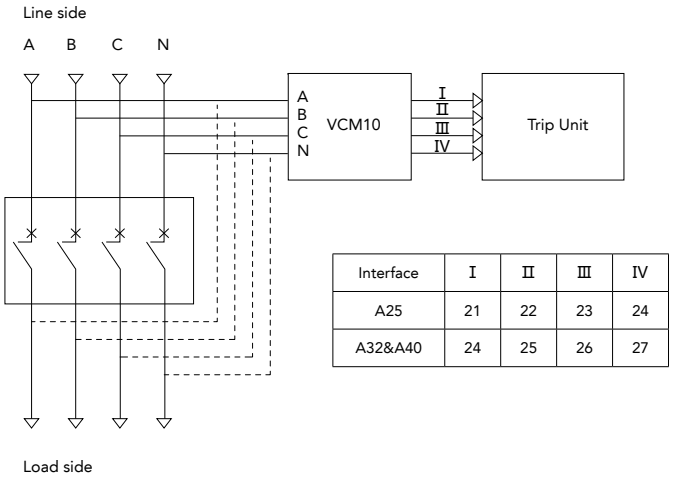

Interface	Ⅰ	Ⅱ	Ⅲ	Ⅳ
A25	21	22	23	24
A32&A40	24	25	26	27

Accessories

Tools	Torque	Wire	Screws
Screwdriver	0.8-1N·m	18-22AWG	5/32in × ⅓in

Dimensions

in(mm)

VCM10

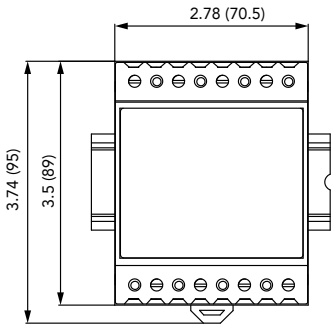

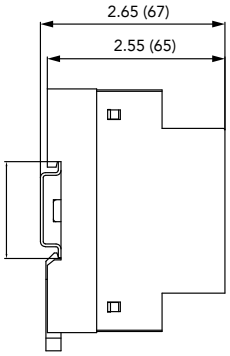

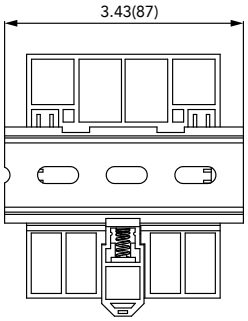

Option1
On the Din-rail in the cabinet

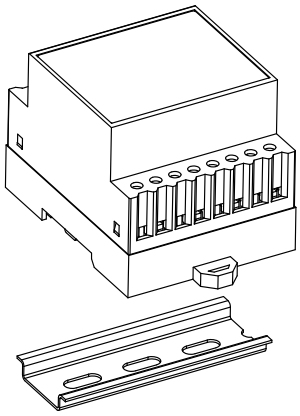

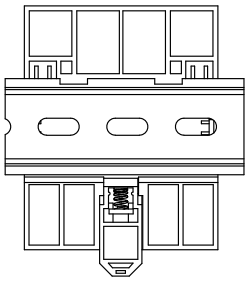

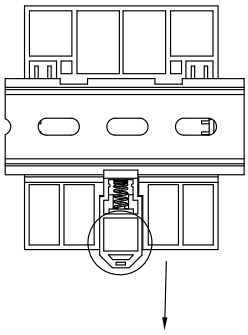

Option2
On the Din-rail mounted in
the side plate of breaker

Step 1
Install the 35mm Din-rail to breaker

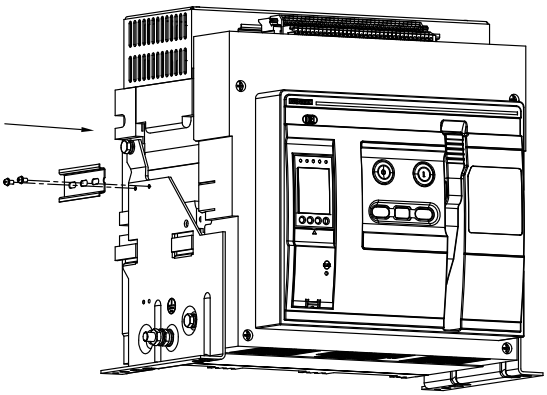

Step 2
Fix VCM10 on the Din-rail

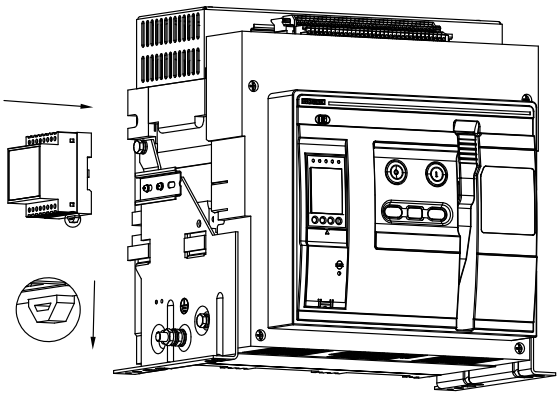

Accessories

Undervoltage release/UVT

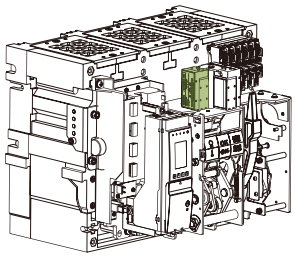

The undervoltage release is an optional device on both manually and electrically operated A Series Power Circuit Breaker and Non-automatic Switch. It opens the breaker or switch when its supply voltage falls to 30–60% of rated voltage. If the release is not energized to 85% of its supply voltage, the breaker or switch cannot be closed electrically or manually.

Undervoltage release offering:

Control voltage	Operational voltage range (85–110%)	Dropout voltage 30-60%	Inrush/continuous power consumption	Operating time
24-30Vdc	20-33Vdc	7-18Vdc	500W/4.5W	≤70ms
48-60Vac/dc	41-66Vac/dc	14-36Vac/dc	500W/4.5W	≤70ms
110-130Vac/dc	94-143Vac/dc	33-78Vac/dc	500W/4.5W	≤70ms
200-240Vac/dc	170-264Vac/dc	60-144Vac/dc	500W/4.5W	≤70ms
380-440Vac	323-484Vac	114-264Vac	500W/4.5W	≤70ms

Shunt trip release/SHT

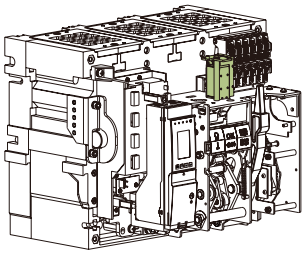

The shunt trip is an standard device on A Series Power Circuit Breaker and Non-automatic Switch. It opens the breaker or switch instantaneously when its coil is energized by a voltage input.

Note: The releases operate by means of minimum impulse current duration time of 200 ms.

Shunt trip offering:

Control voltage	Operational voltage range (70–110%)	Inrush/continuous power consumption	Operating time
24-30Vdc	17-33Vdc	500W/4.5W	≤50ms
48-60Vac/dc	34-66Vac/dc	500W/4.5W	≤50ms
110-130Vac/dc	77-143Vac/dc	500W/4.5W	≤50ms
200-240Vac/dc	140-264Vac/dc	500W/4.5W	≤50ms
380-440Vac	266-484Vac	500W/4.5W	≤50ms

Closing release/XF

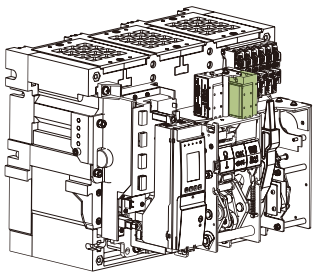

The closing release is an optional device. It remotely closes A Series Power Circuit Breaker and Non-automatic Switch when the coil is energized by a voltage input.

Note: The releases operate by means of minimum impulse current duration time of 200 ms.

Closing release offering:

Control voltage	Operational voltage range (70–110%)	Inrush/continuous power consumption	Operating time
24-30Vdc	17-33Vdc	500W/4.5W	≤70ms
48-60Vac/dc	34-66Vac/dc	500W/4.5W	≤70ms
110-130Vac/dc	77-143Vac/dc	500W/4.5W	≤70ms
200-240Vac/dc	140-264Vac/dc	500W/4.5W	≤70ms
380-440Vac	266-484Vac	500W/4.5W	≤70ms

Accessories

Auxiliary contact/AX

The auxiliary contact remotely monitors ON/OFF position of power circuit breaker or Non-automatic Switch from remote place.
Contact configuration:
44: 4NO and 4NC; 66: 6NO and 6NC;
44C: 4NO or 4NC; 66C: 6NO or 6NC (With common changeover point).

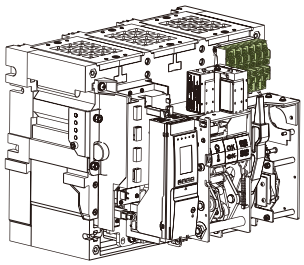

Voltage /V		Rated current /A
AC	240	5
	480	2
DC	110	0.25
	220	0.25

Motor operator/MD

The electric motor charges the closing spring of mechanism when the circuit breaker is closed.
Mechanical charging handle can be used when maintaining or without power supply.
Equipped with a limit switch contact which signals that spring is charged.
Factory installed only.

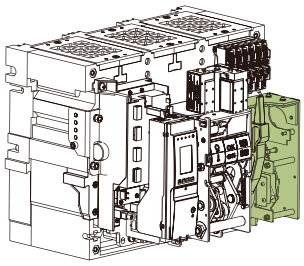

Control voltage	Operational voltage range (85–110%)	Inrush/continuous power consumption	Charging time
24-30Vdc	20-33Vdc	800W/200W	≤4s
48-60Vac/dc	41-66Vac/dc	1200W/200W	≤4s
110-130Vac/dc	94-143Vac/dc	1800W/180W	≤4s
200-240Vac/dc	170-264Vac/dc	1800W/180W	≤4s
380-440Vac	323-484Vac	1800W/180W	≤4s

Miss insertion prevent device

When main breaker is inserting into the cassette, if the rating of main breaker does not match the cassette, it will mechanically prevent main breaker to be inserted in the cassette.
The installation method is variable according to ratings.

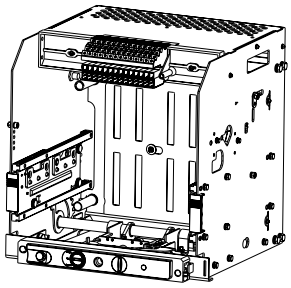

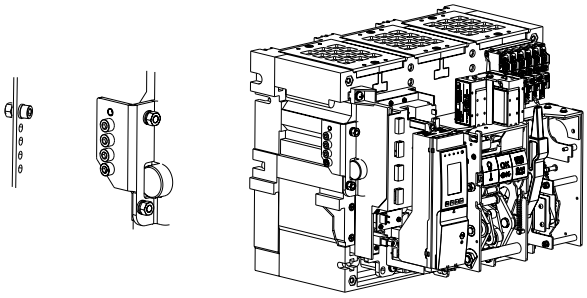

Accessories

Safety shutter

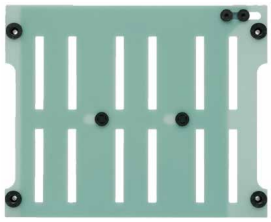

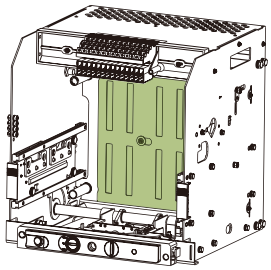

The safety shutter is used to protect the main circuits from wrong operation or dirty. The safety shutter will open when breakers or non-automatical rotated in, the position should be 'connected'.In the test and disconnect, the safety shutter will close.
Only available for draw out circuit breaker & non-automatic switch.

Safety shutter lock

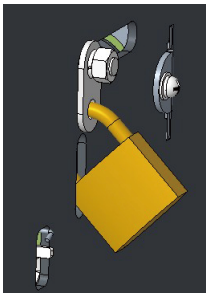

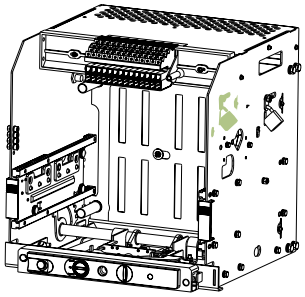

When the main breaker is at disconnected position, lock the safety shutter to prevent main breaker from pushing in.
Only available for draw out circuit breaker & non-automatic switch.
Padlock is not provided.
Diameter of the lock should be 0.12 in to 0.22 in.

Mechanical interlocks with cables/IPA

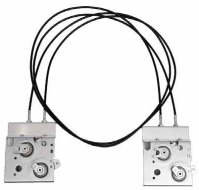

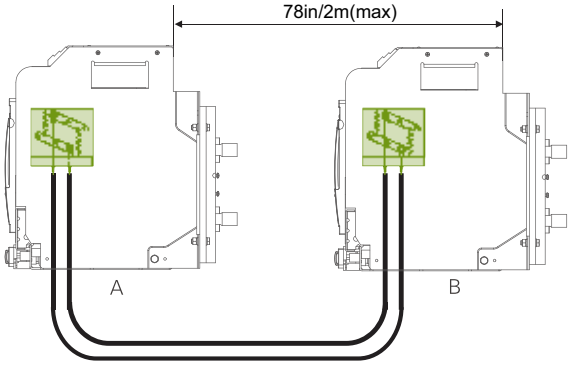

Circuit diagram

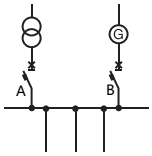

On/Off state

A	B
0	0
1	0
0	1

- For mutual interlocking of 2 or 3 (in preparation) breakers
- Cable length for maximum distance of mounting positions of interlocks 78in (2m)
- Scope of delivery: 2 interlocks and 2 cables (2 breakers version), 3 interlocks and 6 cables (3 breakers' version)

Accessories

OFF position keylock/KLK/KKC

VBP12N

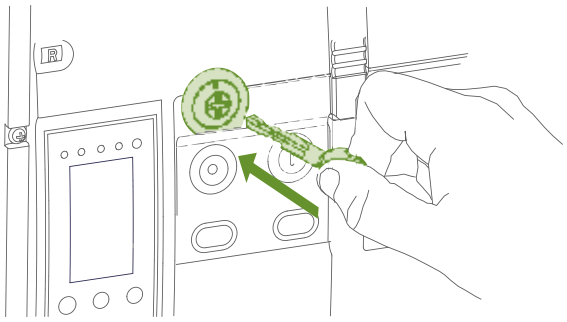

KKC11N

Suitable for A Series Power Circuit Breaker and Non-Automatic Switch.
The OFF position key lock can keep the breaker in OFF position mechanically. Please choose the right KLK as you need.
KLK12N1/KKC11N: 1 lock with 1 key
KLK12N2: 2 locks with the same key
KLK12N3: 3 locks with 2 keys

KKC11N is dedicated for Krik Key Type C(#KCAM00010),purchased by users.

Pushbutton lock device/VBP

VBP12N

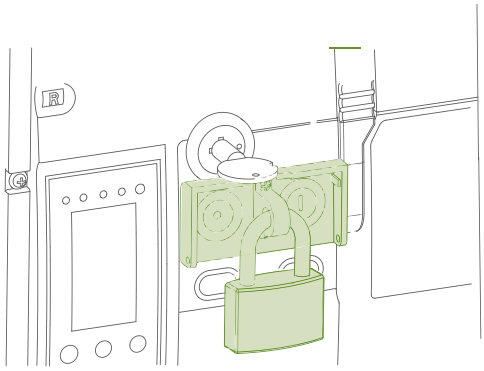

VBP11NM/VBP12NM

Scope of delivery: Lockable cover (lock with key is not a part of delivery).

VBP11NM/VBP12NM
When the left cover is closed, the opening button remains pressed, and it cannot be manually or electrically closed. A cover blocks access to the push buttons of the breaker/switch.

Note: The padlock diameter must be 8±0.2mm, otherwise it will not work properly.

Doorframes/CDP & DDP

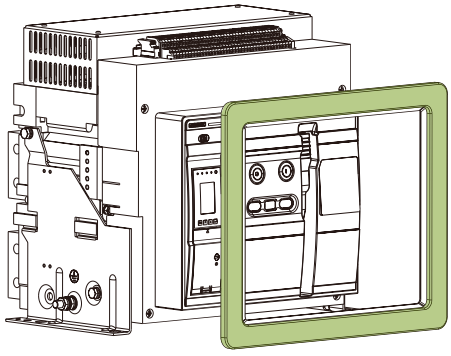

Protection degree: IP40

Accessories

Position indicator/EF

EF12N

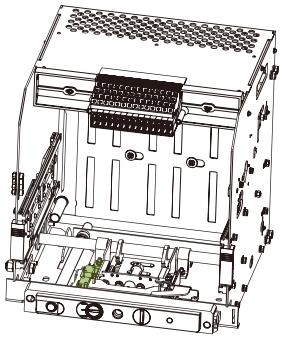

EF11N

Indicate position of the breaker - connected, test, disconnected.
3 CO contacts, one contact for each breaker position.
A32&A40 connected to secondary terminals #58, 59 (Connected), #61, 62 (Test), #64, 65 (Disconnected).
In the scope of delivery, there are additional secondary terminals #58-#66.
Factory installed only.
For draw out type devices only.

A25 connected to secondary terminals #113, #117 (Connected), #114, #118 (Test).
#115, #119 (Disconnected).
In the scope of delivery, there are additional secondary terminals#113-#119.
For draw out type devices only.

Phase barriers/PHS & DPS

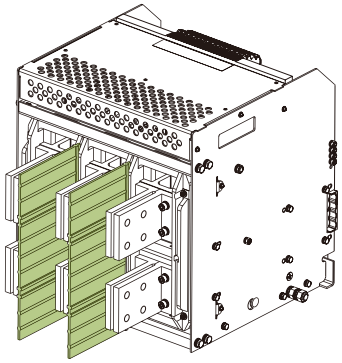

Improve insulation level between main terminals.

Control circuit wiring

A25 control circuit reference wiring diagram(4 NO and 4 NC & 6 NO and 6 NC auxiliary)

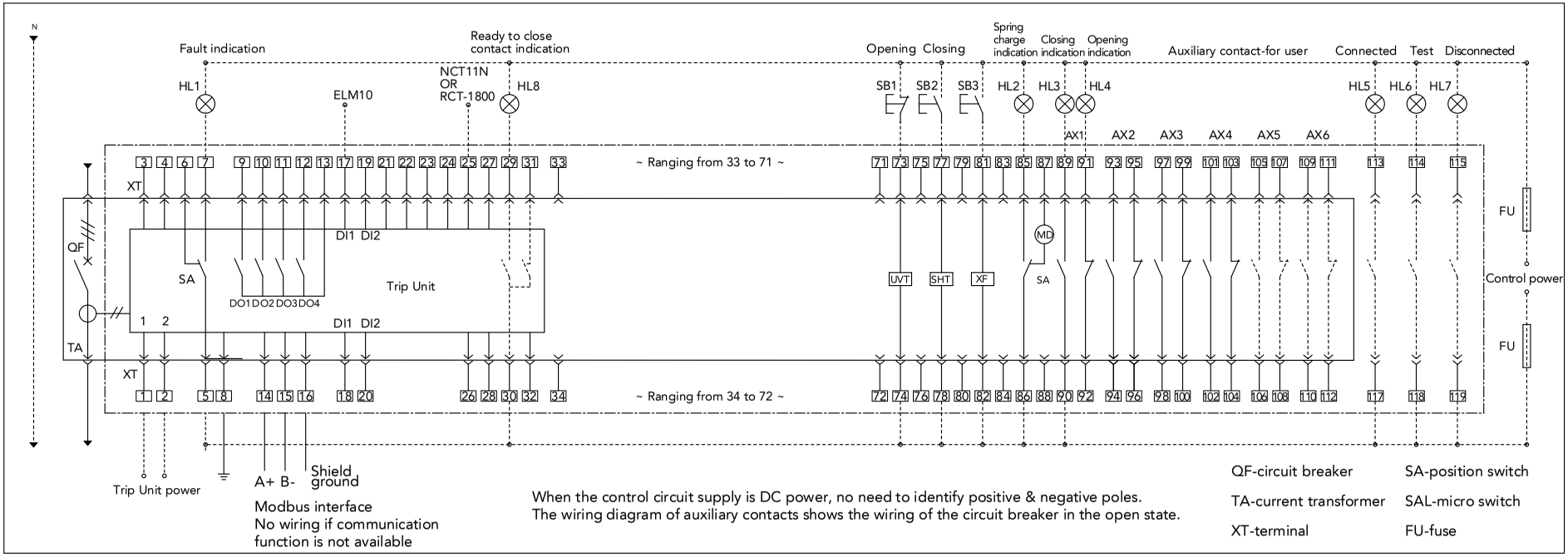

- Power input
  #1, #2: auxiliary power input.
- Fault trip auxiliary signal
  #5, #6, #7: fault trip signal output.
  Auxiliary signal contact capacity: AC380V, 2A; DC250V, 0.3A.
- Programmable signal output interface - (optional)
  #9, #10, #11, #12: Programmable output interface.
  #13: common terminal;
  If need this function, please contact NOARK sales.
- Communication output - (with H type trip unit)
  #14, #15: communication interface output, where #14 is A+, #15 is B-; #16: communication shielded ground wire.
- Programmable signal input interface - (with H type trip unit)
  #17,#18: Programmable input interface DI1;
  #19, #20: Programmable input interface DI2;
  DI input contact capacity: DC24V (No need to identify positive and negative poles).
- Voltage display signal input - (with H type trip unit)
  #21, #22, #23, #24: A, B, C, N phase voltage input terminals respectively.
- NCT11N/RCT-1800-COIL-11 (optional)
  #25,#26,External current transformer for neutral conductor.
- Ready to close contact indication (optional)
  #29, #30, #31: ready to close contact indication.
- UVT/undervoltage release (optional)
  #73 #74: UVT working power input;
  UVT is within special order range.
- SHT/shunt release
  #77, #78: SHT shunt release working power input.
- XF/shunt release
  #81, #82: XF closing coil working power input.
- MD/motor operator
  #86, #87: MD spring charge motor working power input.
- AX1 - AX6 auxiliary contacts
  #89 - #104(AX1 - AX4): 4 groups of auxiliary contacts;
  #89 - #112 (AX1 - AX6): 6 groups of auxiliary contacts.
- Draw out circuit breaker 3-position indicator (optional)
  #113, #117: connected position indicator;
  #114, #118: test position indicator;
  #115, #119 disconnected position indicator;
  this function is only available for specially ordered draw out circuit breakers, no wiring for regular supply.
- SB1-3 and HL1-8 should be provided by user itself.

A25 control circuit reference wiring diagram(4 groups & 6 groups auxiliary)

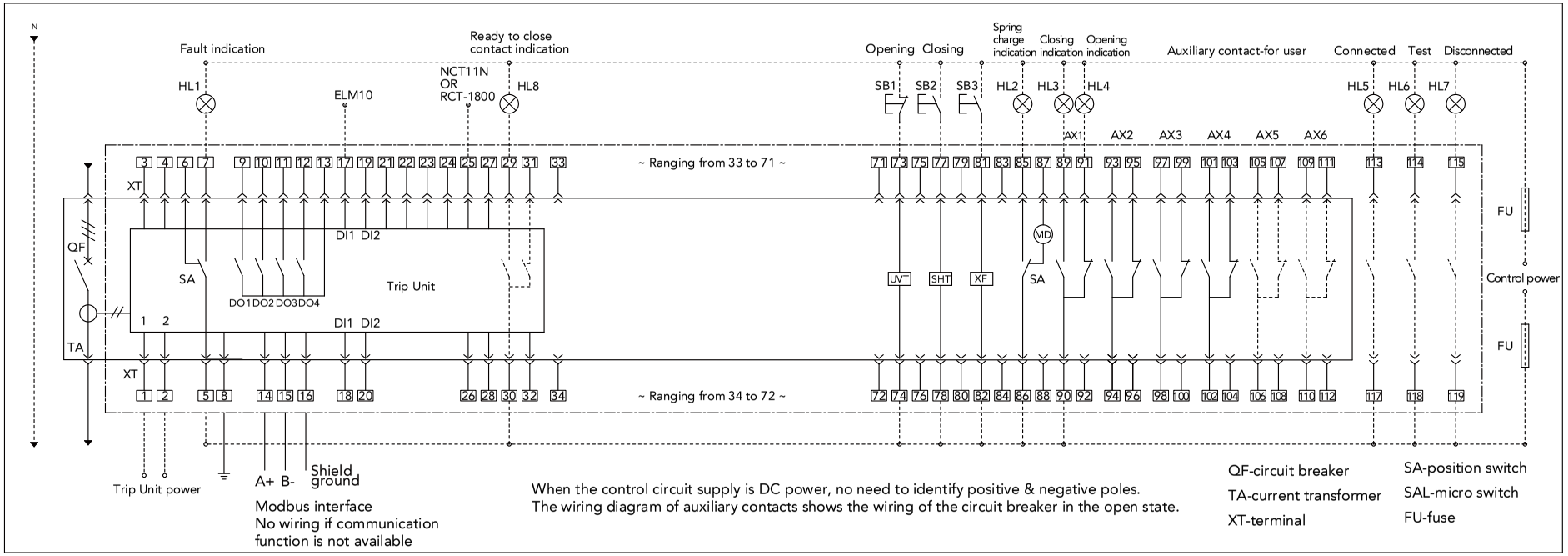

Control circuit wiring

- Power input
  #1, #2: auxiliary power input.
- Fault trip auxiliary signal
  #5, #6, #7: fault trip signal output;
  Auxiliary signal contact capacity: AC380V, 2A; DC250V, 0.3A.
- Programmable signal output interface - (optional)
  #9, #10, #11, #12: Programmable output interface;
  #13: common terminal;
  If need this function, please contact NOARK sales.
- Communication output - (with H type trip unit)
  #14, #15: communication interface output, where #14 is A+, #15 is B-; #16: communication shielded ground wire.
- Programmable signal input interface - (with H type trip unit)
  #17,#18: Programmable input interface DI1;
  #19, #20: Programmable input interface DI2;
  DI input contact capacity: DC24V (No need to identify positive and negative poles).
- Voltage display signal input - (with H type trip unit)
  #21, #22, #23, #24: A, B, C, N phase voltage input terminals respectively.
- NCT11N/RCT-1800-COIL-11 (optional)
  #25,#26,External current transformer for neutral conductor.
- Ready to close contact indication (optional)
  #29, #30, #31: ready to close contact indication.
- UVT/undervoltage release (optional)
  #73 #74: UVT working power input;
  UVT is within special order range.
- SHT/shunt release
  #77, #78: SHT shunt release working power input.
- XF/shunt release
  #81, #82: XF closing coil working power input.
- MD/motor operator
  #86, #87: MD spring charge motor working power input.
- AX1 - AX6 auxiliary contacts
  #89 - #104(AX1 - AX4): 4 groups of auxiliary contacts;
  #89 - #112 (AX1 - AX6): 6 groups of auxiliary contacts.
- Draw out circuit breaker 3-position indicator (optional)
  #113, #117: connected position indicator;
  #114, #118: test position indicator;
  #115, #119 disconnected position indicator;
  this function is only available for specially ordered draw out circuit breakers, no wiring for regular supply.
- SB1-3 and HL1-8 should be provided by user itself.

ASD25 control circuit reference wiring diagram(4 NO and 4 NC & 6 NO and 6 NC auxiliary)

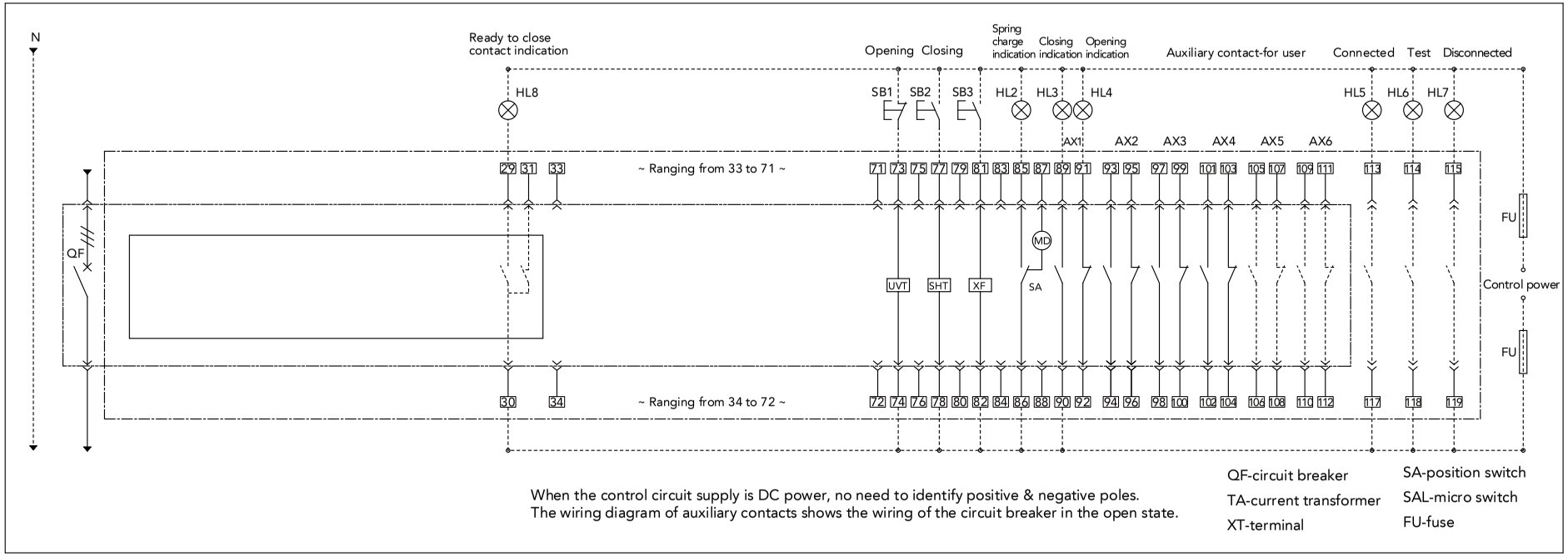

- Ready to close contact indication (optional)
  #28,#29,#30: ready to close contact indication.
- SHT shunt release
  #77, #78: SHT shunt release working power input.
- XF shunt release
  #81, #82: XF closing coil working power input.
- UVT undervoltage release (optional)
  #73 #74: UVT working power input;
  UVT is within special order range.
- MD/motor operator
  #86, #87: MD spring charge motor working power input.
- AX1 - AX6 auxiliary contacts
  #89 - #104(AX1 - AX4): 4 groups of auxiliary contacts;
  #89 - #112 (AX1 - AX6): 6 groups of auxiliary contacts.
- Draw out circuit breaker 3-position indicator (optional)
  #113, #114: connected position indicator;
  #115, #116: test position indicator;
  #117, #118 disconnected position indicator;
  This function is only available for specially ordered draw out circuit breakers, no wiring for regular supply.
- SB1-3 and HL1-5 should be provided by user itself.

ASD25 control circuit reference wiring diagram(4 groups & 6 groups auxiliary)

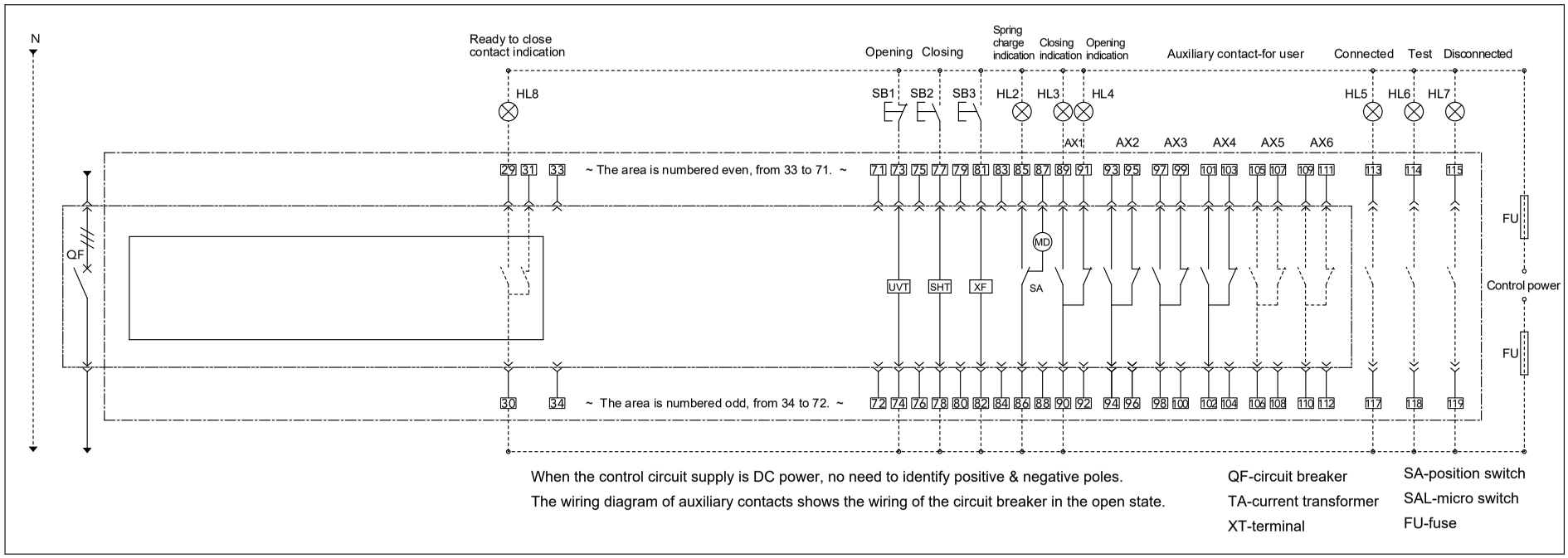

Control circuit wiring

- Ready to close contact indication (optional)
  #28,#29,#30: ready to close contact indication.
- SHT shunt release
  #77, #78: SHT shunt release working power input.
- XF shunt release
  #81, #82: XF closing coil working power input.
- UVT undervoltage release (optional)
  #73 #74: UVT working power input;
  UVT is within special order range.
- MD/motor operator
  #86, #87: MD spring charge motor working power input.
- AX1 - AX6 auxiliary contacts
  #89 - #104(AX1 - AX4): 4 groups of auxiliary contacts;
  #89 - #112 (AX1 - AX6): 6 groups of auxiliary contacts.
- Draw out circuit breaker 3-position indicator (optional)
  #113, #114: connected position indicator;
  #115, #116: test position indicator;
  #117, #118 disconnected position indicator;
  This function is only available for specially ordered draw out circuit breakers, no wiring for regular supply.
- SB1-3 and HL1-5 should be provided by user itself.

Control circuit wiring

A32 and A40 control circuit reference wiring diagram(4 NO and 4 NC & 6 NO and 6NC auxiliary)

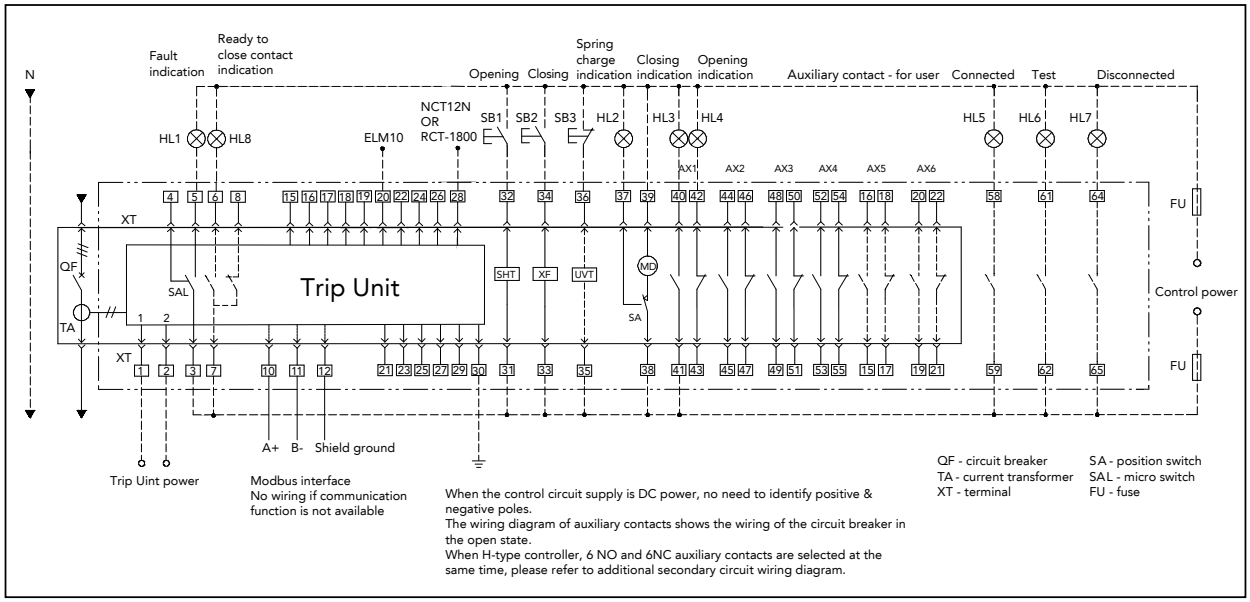

- Power input
  #1, #2: auxiliary power input.

- Fault trip auxiliary signal
  #3, #4, #5: fault trip signal output
  Auxiliary signal contact capacity: AC380V, 2A; DC250V, 0.3A;

- Ready to close contact indication (optional)
  #6, #7, #8: ready to close contact indication;

- Communication output - (with H type trip unit)
  #10, #11: communication interface output, where #10 is A+, #11 is B-;
  #12: communication shielded ground wire.

- Programmable signal output interface - (optional)
  #15, #16, #17, #18: Programmable output interface;
  #19: common terminal;
  If need this function, please contact NOARK sales.

- Programmable signal input interface - (with H type trip unit)
  #20, #21: Programmable input interface DI1;
  #22, #23: Programmable input interface DI2;
  DI input contact capacity: DC24V(No need to identify positive and negative poles).
  When H-type controller, 6 NO and 6NC auxiliary contacts are selected at the same time, please refer to additional secondary circuit wiring diagram.

- Voltage display signal input - (with H type trip unit)
  #24, #25, #26, #27: A, B, C, N phase voltage input terminals respectively.

- NCT12N/RCT-1800-COIL-12 (optional)
  #28, #29: External current transformer for neutral conductor.

- SHT/shunt release
  #31, #32: SHT shunt release working power input, if DC working voltage is used.

- XF/shunt release
  #33, #34: XF closing coil working power input, if DC working voltage is used.

- UVT/undervoltage release (optional)
  #35, #36: UVT working power input;
  UVT is within special order range.

- MD/motor operator
  #37, #38, #39: MD spring charge motor working power input;

- AX1 - AX6 auxiliary contacts
  #40 - #55 (AX1 - AX4): 4 groups of auxiliary contacts for regular supply;
  #15 - #22 (AX5 - AX6): add 2 groups of auxiliary contacts to form specially ordered 6 groups of auxiliary contacts, no wirings for regular supply;

- Withdrawable circuit breaker 3-position indicator (optional)
  #58, #59: connected position indicator;
  #61, #62: test position indicator;
  #64, #65# disconnected position indicator;
  This function is only available for specially ordered withdrawable circuit breakers, no wiring for regular supply.

- SB1-3 and HL1-8 should be provided by user itself.

Control circuit wiring

A32 and A40 control circuit reference wiring diagram(4 groups & 6groups auxiliary)

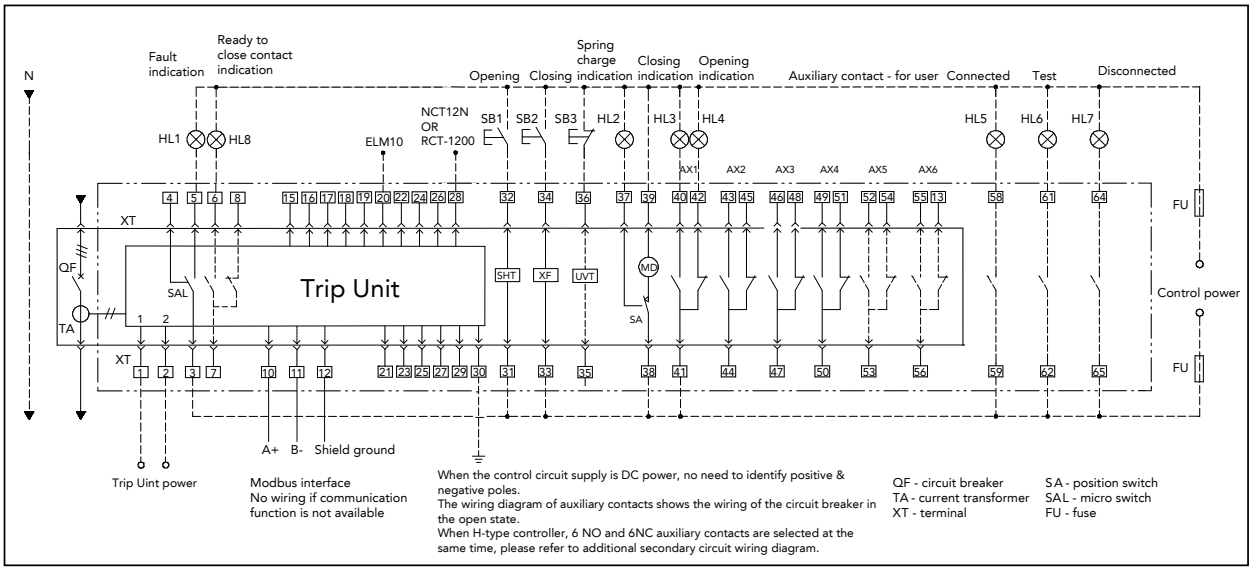

- Power input
  #1, #2: auxiliary power input.

- Fault trip auxiliary signal
  #3, #4, #5: fault trip signal output
  Auxiliary signal contact capacity: AC380V, 2A; DC250V, 0.3A;

- Ready to close contact indication (optional)
  #6, #7, #8: ready to close contact indication;

- Communication output - (with H type trip unit)
  #10, #11: communication interface output, where #10 is A+, #11 is B-;
  #12: communication shielded ground wire.

- Programmable signal output interface - (optional)
  #15, #16, #17, #18: Programmable output interface;
  #19: common terminal;
  If need this function, please contact NOARK sales.

- Programmable signal input interface - (with H type trip unit)
  #20, #21: Programmable input interface DI1;
  #22, #23: Programmable input interface DI2;
  DI input contact capacity: DC24V(No need to identify positive and negative poles).
  When H-type controller, 6 NO and 6NC auxiliary contacts are selected at the same time, please refer to additional secondary circuit wiring diagram.

- Voltage display signal input - (with H type trip unit)
  #24, #25, #26, #27: A, B, C, N phase voltage input terminals respectively.

- NCT12N/RCT-1800-COIL-12 (optional)
  #28, #29: External current transformer for neutral conductor.

When H-type controller, 6 NO and 6NC auxiliary contacts are selected at the same time, please refer to additional secondary circuit wiring diagram.

- SHT/shunt release
  #31, #32: SHT shunt release working power input.

- XF/shunt release
  #33, #34: XF closing coil working power input.

- UVT/undervoltage release (optional)
  #35,#36:UVT working power input;
  UVT is within special order range.

- MD/motor operator
  #37,#38, #39: MD spring charge motor working power input;

- AX1 -AX6 auxiliary contacts
  #40-#51(AX1-AX4): 4 groups of auxiliary contacts for regular supply;
  #52-#56 and #13 (AX5 -AX6): add 2 groups of auxiliary contacts to form specially ordered 6 groups of auxiliary contacts, no wirings for regular supply;

- Draw out circuit breaker 3-position indicator (optional)
  #58,#59: connected position indicator;
  #61,#62: test position indicator;
  #64,#65:disconnected position indicator;
  this function is only available for specially ordered draw out circuit breakers, no wiring for regular supply.

- SB1-3 and HL1-8 should be provided by user itself.

Control circuit wiring

ASD32 and ASD40 control circuit referance wiring diagram(4 NO and 4 NC & 6 NO and 6NC auxiliary)

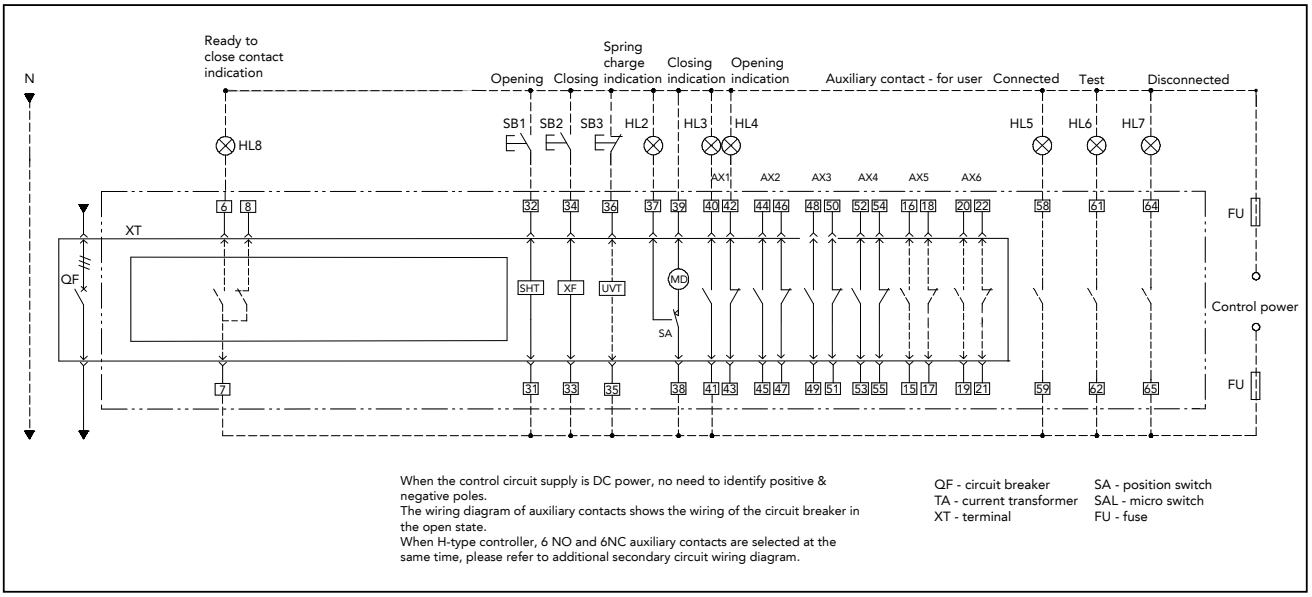

- Ready to close contact indication (optional)
  #6, #7, #8: ready to close contact indication;

- SHT/shunt release
  #31, #32: SHT shunt release working power input.

- XF/shunt release
  #33, #34: XF closing coil working power input.

- UVT/undervoltage release (optional)
  #35, #36: UVT working power input;
  UVT is within special order range.

- MD/motor operator
  #37, #38, #39: MD spring charge motor working power input.

- AX1 - AX6 auxiliary contacts
  #40 - #55 (AX1 - AX4): 4 groups of auxiliary contacts for regular supply;
  #15 - #22 (AX5 - AX6): add 2 groups of auxiliary contacts to form specially ordered 6 groups of auxiliary contacts, no wirings for regular supply;

- Withdrawable circuit breaker 3-position indicator (optional)
  #58, #59: connected position indicator;
  #61, #62: test position indicator;
  #64, #65: disconnected position indicator;
  This function is only available for specially ordered withdrawable switchs, no wiring for regular supply.

- SB1-3 and HL2-8 should be provided by user itself.

Control circuit wiring

ASD32 and ASD40 control circuit reference wiring diagram(4 groups & 6 groups auxiliary)

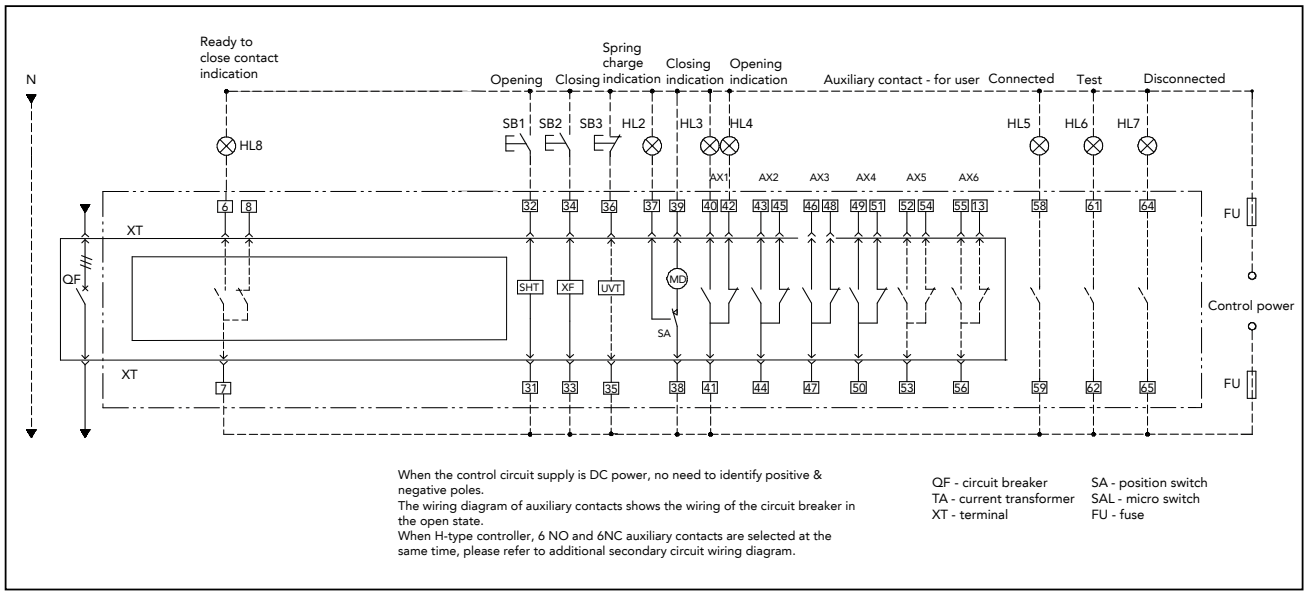

When the control circuit supply is DC power, no need to identify positive & negative poles.
The wiring diagram of auxiliary contacts shows the wiring of the circuit breaker in the open state.
When H-type controller, 6 NO and 6NC auxiliary contacts are selected at the same time, please refer to additional secondary circuit wiring diagram.

QF - circuit breaker
TA - current transformer
XT - terminal
SA - position switch
SAL - micro switch
FU - fuse

- Ready to close contact indication (optional)
  #6, #7, #8: ready to close contact indication;
- SHT/shunt release
  #31, #32: SHT shunt release working power input.
- XF/shunt release
  #33, #34: XF closing coil working power input.
- UVT/undervoltage release (optional)
  #35, #36: UVT working power input;
  UVT is within special order range.
- MD/motor operator
  #37, #38, #39: MD spring charge motor working power input.
- AX1 - AX6 auxiliary contacts
  #40 - #51 (AX1 - AX4): 4 groups of auxiliary contacts for regular supply;
  #52 - #56 and #13 (AX5 - AX6): add 2 groups of auxiliary contacts to form specially ordered 6 groups of auxiliary contacts, no wirings for regular supply;
- Draw out circuit breaker 3-position indicator (optional)
  #58, #59: connected position indicator;
  #61, #62: test position indicator;
  #64, #65: disconnected position indicator;
  This function is only available for specially ordered withdrawable switchs, no wiring for regular supply.
- SB1-3 and HL2-8 should be provided by user itself.

Trip Unit

NOARK
Ig
Ir
Isd
Ii
Run
Smart Unit
ESC
In
2000A
LOW VOLTAGE AC POWER CIRCUIT BREAKER TRIP UNIT

Profile of SU

Overview

Trip Unit 2.0
LI Protection

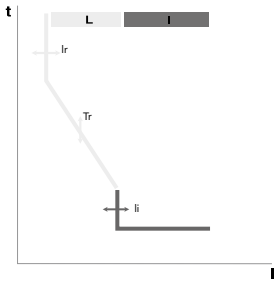

Trip Unit 3.0
LSI Protection

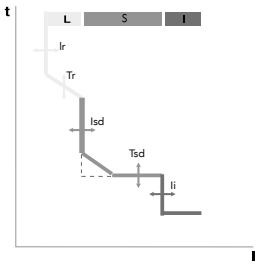

Trip Unit 4.0
LSIG Protection

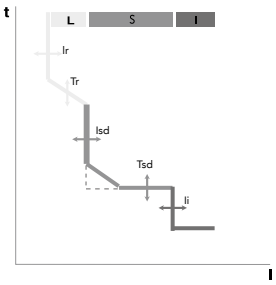

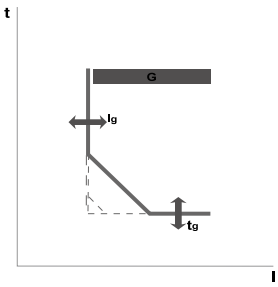

Table of Models

	M	A	H
2.0N	●	●	●
3.0N	●	●	●
4.0N	●	●	●

All A Series Power Circuit Breakers are equipped with a replaceable trip unit. The trip unit is specially designed to protect power systems and loads. It is applicable to 50/60Hz power grids and mainly used for power distribution and feeder protection, to protect lines and power supplies from overload, short circuit, ground-fault, current imbalance, over-frequency, under-frequency, reverse power and other faults. Due to the load monitoring, demand protection and zone-selective interlocking, the power grid can work reasonably. The trip unit can also be used to measure the current, voltage, power, frequency, electric energy, demand, harmon-ics and other parameters of grid nodes, and record and maintenance parameters such as the fault, alarm, operation, maximum current history and switch contact wear. When the power grid is subject to communication networking, the controller can be used as a remote terminal of the power automa-tion network for remote metering, signaling, con-trol, regulation etc. In addition, the controller sup-ports multiple protocols to meet various network-ing requirements.

Naming of Trip Unit

3	.	0	A
a		b	c

Table of Models

Protection type	Measurement type
a 2: LI protection 3: LSI protection 4: LSIG protection	c Basic type M Ammeter type A Harmonics type H Note: M type is LED display; A and H types are LCD display.
Design version	
b Distinguish the design version of the trip unit. “0” means the first version.	

Appearance

4.0

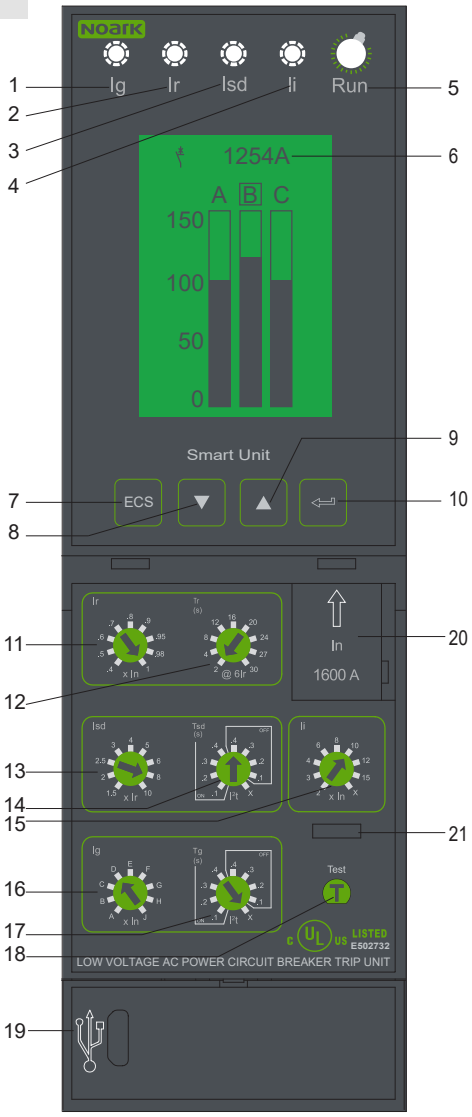

Appearance Indicators

Indicatiors

1 Ig indicator: It is ON in case of tripping due to ground-fault.
2 Ir indicator: It is flashing in case of long time overload protection and normally ON after Long time delay tripping. It will return to the normal state after receiving the reset command.
3 Isd indicator: It is ON in case of Short time delay trip.
4 Ii indicator: It is ON in case of instantaneous tripping of the short circuit.
5 Running indicator: It is flashing during normal running.
6 A and H model: LCD, three-color backlight, green in normal running, yellow in alarm and red in case of tripping due to fault current.
M model: LED digital tube display.

Buttons

7 ESC: Exit the current menu and enter the previous menu, or cancel the current parameter settings.
8 Down: move down or decrease the setting value ("-");
9 Up: move up or increase the setting value ("+").
10 OK: Enter the sub-menu of the selected box or enable one box to change the values.

Adjustment Interface

11 Long time delay current setting Ir
12 Long time delay trip time tr
13 Short time delay current Isd
14 Short time delay trip time setting tsd
15 Instantaneous current setting Ii
16 Ground fault current setting Ig
17 Ground fault tripping time setting Tg
18 Testing button: Tripping testing button
19 USB port
20 Rating plug
21 Transparent cover lock hook

3.0

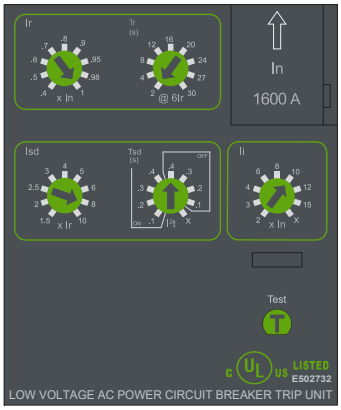

4.0

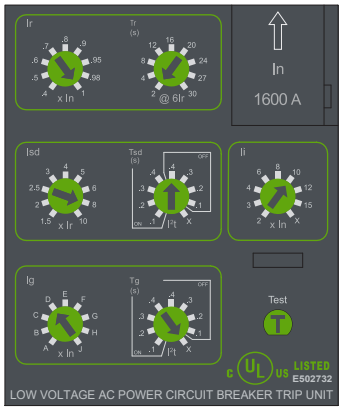

Appearance

Description of rating plug

The Rating plug module is used to indicate the rated current of the circuit breaker in operation.

If the rating plug module needs to be replaced, first power off the controller, then take out the original rating plug module by a flat-blade screwdriver and install the required rating plug module.

USB port

In case of no power supply, the controller can be powered on through the 5V USB port, to view its internal information and test its tripping function.

Fault Indicator

Reset after trip

When the circuit breaker trips due to any fault, the corresponding indicator will be ON, the LCD will turn red, and the trip interface will be shown on the LED display. First press the "Reset" button (see the left figure) and then "ESC" to reset the controller. The default interface of the controller will appear.

Reset after alarm

When the circuit breaker sends an alarm, the LCD will turn yellow, and the LED ALM indicator will be ON. In this case, alarm record need to be check. After the alarm is cleared, the controller can return to the normal state.

Note: The rating of replaced rating plug should not exceed the specified frame size rating in factory and not less than the required minimum value of frame size rating.

Function Description

The smart unit is used for power distribution protection. It can be configured as basic type, Ammeter type and harmonics controllers.

	Function / Model	M (Basic type)	A (Ammeter type)	H (Harmonic type)
Protection function	Long time protection	●	●	●
	Overload pre-alarm	●	●	●
	Short time protection	●	●	●
	Instantaneous protection	●	●	●
	Neutral protection	●	●	●
	Ground-fault protection	●4.0	●4.0	●4.0
	Current unbalance protection	●	●	●
	MCR and HSISC protection	●	●	●
	Voltage unbalance protection			●
	Overvoltage protection			●
	Undervoltage protection			●
	Over-frequency protection			●
	Under-frequency protection			●
	Phase sequence protection			●
	Reverse active power protection			●
	Demand value protection			●
	Harmonics protection			●
	Thermal memory	●	●	●
	ARMS	●	●	●
Measurement function	Current measurement	●	●	●
	Voltage measurement			●
	Frequency measurement			●
	Power measurement			●
	Power factor measurement			●
	Electric energy measurement			●
	Demand value measurement			●
	Harmonic measurement			●
	Test function	●	●	●
	Record of operations	●	●	●
Maintenance function	Trip records	●	●	●
	Alarm records	●	●	●
	Position change records	●	●	●
	Contact wear records		●	●
	Load monitoring			●
	Zone Selective Interlocking			●
Other functions	RS485 communication function			●
	Digital input/output DI/DO			●
	Real time clock		●	●
	LED display	●		
	Tri-color LCD display		●	●
HMI	LED status indication	●	●	●
	Button operation	●	●	●
	Knob setting	●	●	●
	USB test port	●	●	●

Note: Please Contact Noark if customers use functions like Load monitor, Zone-Selection Interlocking and digital input/output DI/DO.

Profile of SU

Knob Setting Instructions

Open the standard transparent cover and carry out the necessary settings of the controller. The knob is used mainly to set protection parameters: long-time delay, short-time delay, instantaneous, and ground-fault values. Under normal circumstances, the knob settings can meet the system requirements. Fine-tuning is not necessary for the function parameters.

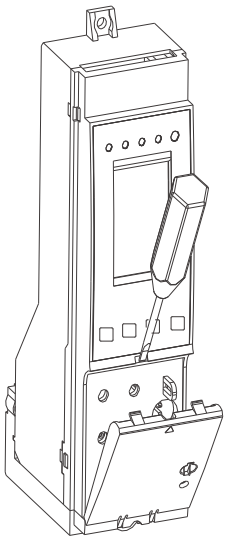

Open the standard transparent cover with a flat-blade screwdriver

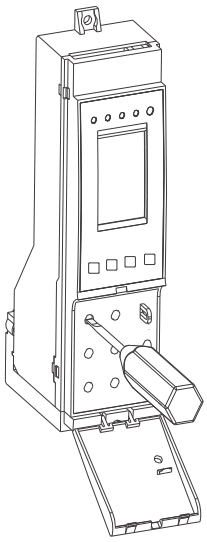

Set the knobs with a flat-blade screwdriver

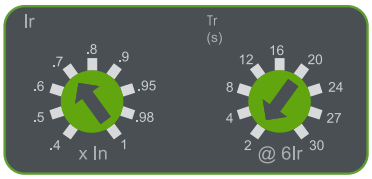

Long time delay

Long time delay setting Take In=1600A as an example

In=1600A
Ir=0.7xIn=1120A
Tr=2s(@6Ir)

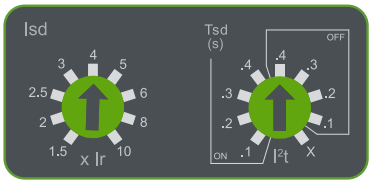

Short time delay

Short time delay setting Take In=1600A as an example

In=1600A
Isd=4 xIr=4480A
Tsd=0.4S

Note: "X" of the Tsd setting knob: Disable the short-delay protection. Tsd setting panel: OFF: definite time setting area; ON: inverse time setting area

Instantaneous

Instantaneous parameter setting Take In=1600A as an example

In=1600A
Ii=15xIn=24000A

Note: X=off

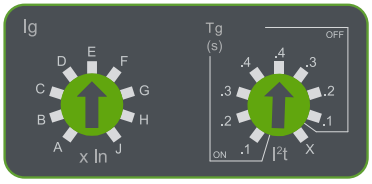

Ground

Ground-fault protection time setting Take In=1600A as an example

In=1600A
Ig=880A
Tg=0.4S

Note: "X" of the Tg setting knob: Disable the ground protection. Tg setting panel: OFF: definite time setting area; ON: inverse time setting area

Button Operating Instructions

Buttons can be used to set other functions, such as overvoltage, undervoltage, voltage unbalance, over-frequency, under-frequency, reverse active Power and harmonic protection, load monitoring, etc. Refer to relevant chapters for specific details.

- Press " ⏎ " once to enter the "Setting" interface and menus (e.g. "System Setting" and "Protect Set").
- In the "Setting" interface, set system parameters by pressing the " ▲ " and " ▼ " buttons.

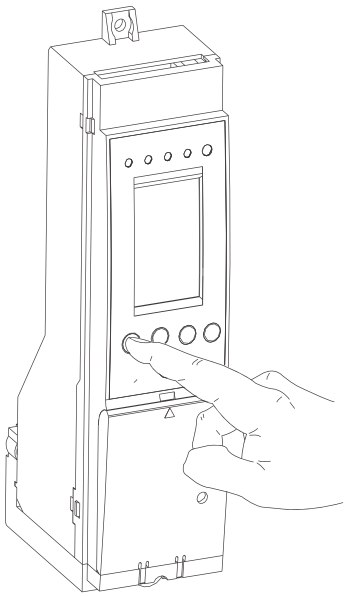

Fine-tune parameters or check the measured values via buttons

Example: Current unbalance adjustment

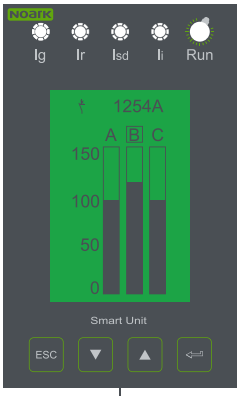

- Open the initial interface.
- Press ⏎ to enter the "Setting" interface.
- Press ▼ or ▲ to the "Protect Set" interface, and then press ⏎ into "Protect Set" interface,
- Press ▼ or ▲ to the "I Protect" interface, and then press ⏎ to open the "I Protect" interface.
- Press ▼ and ▲ to the "I Unbalance" interface, and then press ⏎ to open the "I Unbalance" interface.
- Press ⏎ to make the menu box thicker, and ▼ and ▲ to select "Close" , "Alarm" and "Trip" .
- Then press ▼ and ▲ to set and save the values.

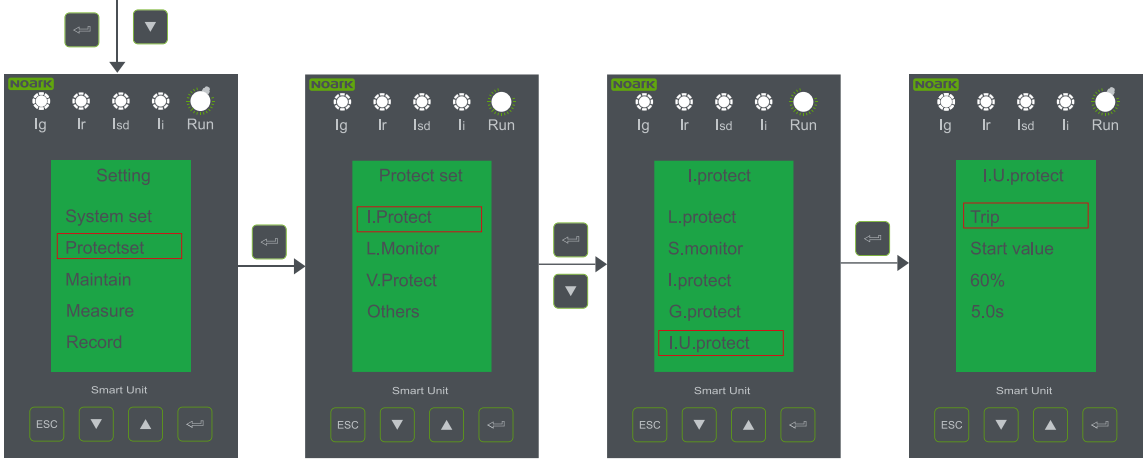

Main Menus

The Trip unit is configured with one default interface and five main menus.

- The default interface displays the continuously measured phase currents: Ia, Ib, Ic, and In.
- Main menu of system setting
- Main menu of protection setting
- Main menu of maintenance mode setting
- Main menu of measurement
- Main menu of record

Note: The basic type controller uses LED display menu.

Default interface after Starup.

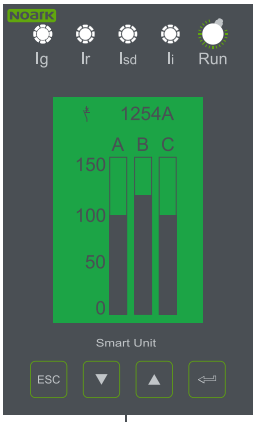

- Display the current value of each phase in the default interface.
- Press ▼ or ▲ to switch the current values of the phase A, B and C.
- Press ⏎ in the default interface to enter the" Setting" interface.

"Setting" main menu

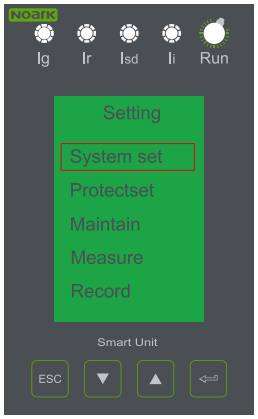

- Press ▼ or ▲ to adjust the menu to be entered and ⏎ to enter each sub-menu.
- Press ECS to return to the default interface.

System setting main menu

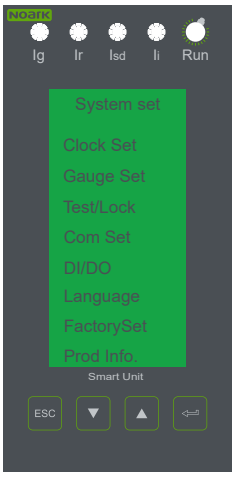

Protect setting main menu

Maintenance mode setting main menu

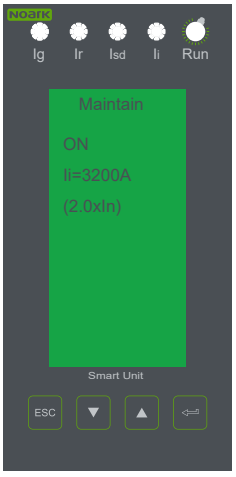

Measurement main menu

Record main menu

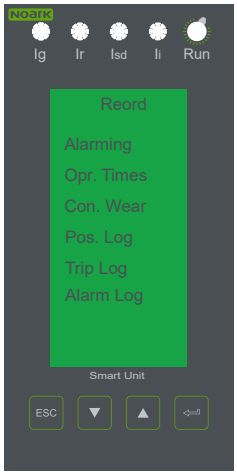

Menu

The menu consists of five parts: System Setting menu, Protection Setting menu, Maintenance mode setting, Measurement menu and Record menu.

Level 1	Level 2	Level 3	Level 4	Level 5
System set	Clock Set	Date and time setting		
	Gauge Set	LineinType	Top-Fed	
			Bottom-Fed	
		Demand time	Demand time adjustment	
	Test/Lock	Test Trip	Protection tripping test (G.protect、ActionTime)	LSI
		RemoteLock	Lock/unlock	
	com set	ComAddress	1-247	
		Baudrate	9600,19200	
		Parity	None,Odd,Even	
	DI/DO	Func Set	General DO/DI function selection	
		Run Mode	DO: NO/NC voltage level; NO/NC pulse; pulse time	
		State	Display DI/DO status(0/1)	
	Language	Chinese / English		
	FactorySet	Ensure	Reset to factory setting	
	Prod Info	Software version & Rated voltage		
Protect set	I. Protect	L.protect Overload protection	Display Ir and Tr. The cooling time and curve type are adjustable.	
		S.protect Time-delayed overcurrent protection	Definite/inverse time, Isd, Tsd	
		I.protect Instantaneous overcurrent protection	Ii	
		G.protect Groundingprotection	Definite/inverse time, Ig, Tg	
		I.U.protect Current unbalance protection	Off	
			Alarm: (start value, time) & (return value, time) setting	
			Trip: start value & time setting	
		N.protect Neutral protection	OFF,50%,100%	
		Demand Set	Off	
			Alarm: (start value, time) & (return value, time) setting	
			Trip: start value & time setting	
		I.harmonic Current harmonic	Off	
			Alarm: (start value, time) & (return value, time) setting	
			Trip: start value & time setting	
		G.alarm Grounding Alarm	Off	
			Alarm: (start value, time) & (return value, time) setting	
	L.Monitor Load monitoring	Off		
		LD.shed.I Load Shedding I	(Load shedding value 1, time) & (Load shedding value 2, time)	
		LD.shed.II LoadShedding II	(Start value, time) & (return value, time) setting	
	V.protect	UV.protect. Undervoltage protection	Off	
			Alarm: (start value, time) & (return value, time) setting	
			Trip: start value & time setting	
		OV.protect Overvoltage protection	Off	
			Alarm: (start value, time) & (return value, time) setting	
			Trip: start value & time setting	
		V.U Voltage unbalance	Off	
			Alarm: (start value, time) & (return value, time) setting	
			Trip: start value & time setting	
		V.harmonic Voltage harmonic	Off	
			Alarm: (start value, time) & (return value, time) setting	
			Trip: start value & time setting	

Menu

Level 1	Level 2	Level 3	Level 4	Level 5
Protect set	Others	UF.protect Underfrequency protection	Off	
			Alarm: (start value, time) &(return value, time) setting	
			Trip: start value & time setting	
		OF.protect Overfrequency protection	Off	
			Alarm: (start value, time) & (return value, time) setting	
			Trip: start value & time setting	
		RP.protect Reverse power protection	Off	
			Alarm: (start value, time) & (return value, time) setting	
			Trip: start value & time setting	
		PS.protect Phase sequence protection	Off	
			Alarm: Start value setting	
			Trip: start value setting	
Maintain	State: OFF/ON; Protection value setting			
Measure	Current I	Ins.Value Instantaneous value	Ia, Ib, Ic, In	Display the current
			Maximum	Display the maximum value
			Unbalance rate	Display the unbalance rate
		I Heat Ca.	Display thermal capacity	
		Peak Coef.	Display the crest coefficient of Ia, Ib, Ic and In	
		I.dmd	Display the required values of Ia, Ib, Ic and In	
	Voltage V	Ins.Value	Display the Uab, Ubc, Uca, Uan, Ubn and Ucn	
		Average	Display the average value of U	
		Unbal.Rate	Display the unbalance rate of U	
		Phase Seq.	Display the phase sequence	
		Peak Coef.	Display the crest coefficient	
	Freque.F	Display frequency		
	Power P	P, Q, S	Instantaneous value	
			demand Val demand value	
		PF	PF=0.00	
	Energy E	Tot.energy Total energy	Display E.P E.Q E.S	
			reset（+/-）	
		In.energy Input energy	Display E.P E.Q	
			Reset（+/-）	
		Out energy Output energy	Display E.P E.Q	
			Reset（+/-）	
	Harmonic H	Fun.Wave Fundamental Wave	Current I	Display the fundamental-harmonic current
			Voltage U	Display the fundamental-harmonic voltage
		ITHD	I（%）	
		UTHD	U（%）	
		FFT	I、U	
Record	Alarming	Display the current alarm type	CT Break,magn Break,O-L alarm,Action rejection	
	Opr.Times	Display the number of operations		
	Con.Wear	Display contact wear status		
	Pos.Log	Display 10 Position change records		
	Trip Log	Display 10 trip records		
	Alarm Log	Display 10 alarm records	CT Break,magn Break,O-L alarm,Action rejection	

Note: The actual menu may change according to the functions selected by the user.

Symbol and Description of M Type Trip Unit

The LED of the trip unit is a customized module. The symbols are described in the following table for the convenience of users.

1	Lg L1 L2 L3 LN	Ground-fault, A, B, C and N phases
2	IR= Tr=	Current and time setting of long-time delay
3	Isd= tsd=	Current and time setting of short-time delay
4	Ig= tg=	Ground-fault current and time setting
5	Ii=	Instantaneous current setting
6	r	Reverse time
7	F0	Neutral protection setting
8	F1	Current unbalance protection setting
9	F2	Thermal memory setting
10	F3	trip simulation setting
11	F4	Communication setting
12	F5	Trip record view
13	F6	Alarm record view
14	F7	Position change record view
15	F8	View of LSIG setting
16	F9	Maintenance mode setting(ARMS)
17	U.	Current unbalance
18	3PHS	Test setting of LSI current protection
19	gnd	Vector and ground-fault protection test setting
20	rrUE	Test confirmation status
21	gdr	Modbus-RUT address setting
22	A.-	Modbus-RUT address selection
23	bPS means	Modbus-RUT baud rate setting
24	TRIP	Trip status
25	RUN	Running status
26	SET	Normally ON: setting status
27	ALM	Alarm status
28	NULL	No information
29	OPEN	Open
30	CLSE	Closed
31	E1	Magnetic break
32	E2	CT break
33	E3	Action rejection
34	L	LSIG curve. The full display means normal operation. In case of fault tripping, the corresponding segment will flash.
35	ESC	"ESC" button identification
36	▽	"Down" button identification
37	△	"Up" button identification
38	⏎	"OK" button identification

LED Display Menu and Function Overview

Operating Instrcutions for M Type Trip Unit Interface

The M type trip unit includes the following interfaces: default interface, setting interface, view interface, and trip interface.

Default interface is measurement status, all fault indicators are OFF, and the current of each phase is displayed cyclically.

Example of parameter setting: Press "OK" in the default interface to enter the menu setting interface F0 of the controller. Press "OK" to enter the parameter setting or view interface. Continue to press "OK" to enable the parameter setting interface, "SET" symbol will appear in the lower right corner of the interface, where the parameters can be set by pressing "UP" and "DOWN" in this interface. After setting the parameters, press "OK" to save them and "ESC" to the default interface.

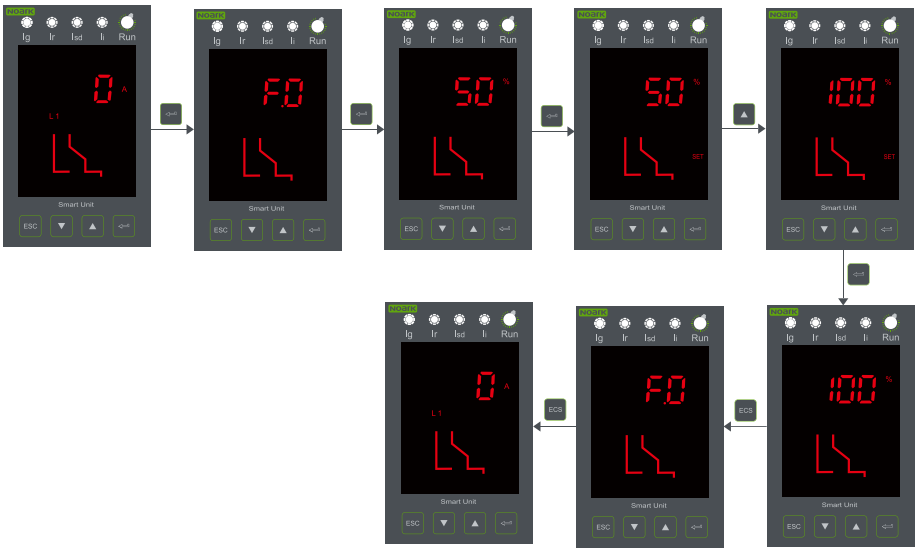

Main function menus and settings of the M type control unit :

F0: Neutral protection setting: 50%, 100%, OFF.

F1: Current unbalance setting: ON (OFF), current unbalance rate setting, delay time setting.

F2: Thermal memory setting: ON (OFF), thermal memory recovery time setting.

F3: Test function setting: LSI protection test, ground-fault protection test.

F4: Communication setting: communication address (1-247), baud rate (9600, 19200).

F5: Trip record view: Take the instantaneous trip for example. Press "OK" in the default interface, select the F5 menu by pressing "UP" and "DOWN" , and then press "OK" to enter the trip record view interface. Select the serial number (e.g. 01) of record, and press "OK" . The instantaneous trip current interface will appear. The trip time interface can be viewed by pressing "UP" and "DOWN" .

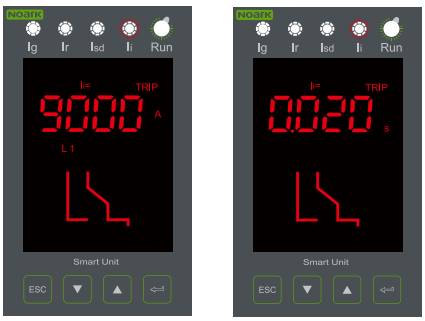

F6: Alarm records include the magnetic break alarm, CT break alarm and overload alarm. E1 represents the magnetic break, and E2 represents CT break alarm.E3 represents action reject.

F7: Position change records include opening, closing and trip event records.

F8: View menu for LSIG protection setting, used to view the existing knob settings.

F9: Maintenance mode setting(ARMS):ON(OFF),Protection value setting.

Note: Long-time delay OFF setting: Set the Tr to 30S and enter the menu F8. Adjust Tr to the OFF status to disable long-time delay.

Trip Curves

Selective Protection LSI

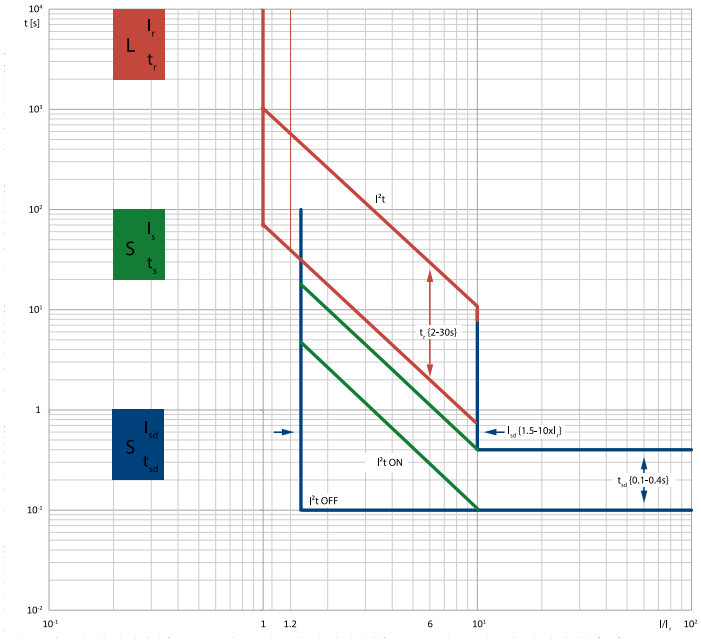

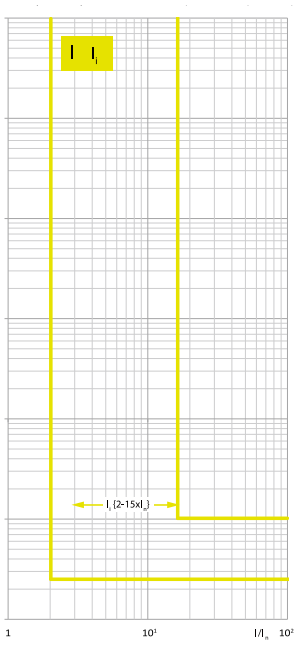

Ground protection curve

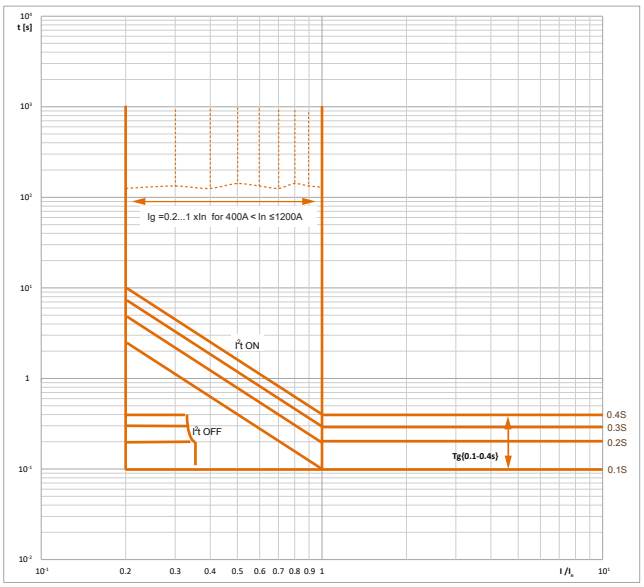

(400A＜In≤1200A)
Setting range of G protection curve

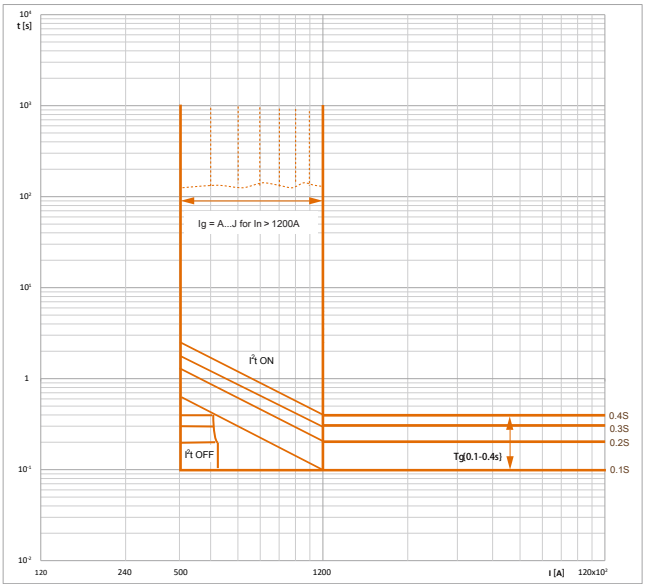

(In＞1200A)
Setting range of G protection curve

Noark

Printed with environment-friendly paper

Copyright Noark. All Rights Reserved

http://na.noark-electric.com

ZA202406UL