NC8-1260～2650 AC Contactor

Operation Manual

0ZTD.463.1458

ZHEJIANG CHINT ELECTRICS CO.,LTD.

August 2022

1. Main Technical Data and Performance

1.1 For the main technical data and performance indicators of the contactors, please refer to Table 1.

Table 1: Main Technical Data and Performance Indicators

Model			NC8-1260	NC8-1450	NC8-1700	NC8-2100	NC8-2650
Frame Size[a]			1260	1450~2100			2650
Rated Duty			8h, non-stop, intermittent (load factor 40%), short-time				
Circuit Frequency			AC50Hz or 60Hz				
Pole Impedance (Ω)			≤0.05				
EMC			A				
Compatible Fuse Type			RST	RSG-3	RSG-5	RSG-5	RSG-6
Fuse Rated Current (A)			1500	1500	2000	2300	2800
Flashover Distance (mm)			15	≤100			
Coil Power	Pull-in (VA/W)	AC Coil	≤850	≤2400			≤2700
		DC Coil		≤2200			≤2880
		Wide Voltage Coil	≤1500	≤1000			≤1600
	Hold-in (VA/W)	AC Coil	≤18	≤44			≤44
		DC Coil		≤16			≤18
		Wide Voltage Coil	≤18	≤30			≤30
Ambient air temperature:			-5℃~+40℃, and average temperature within 24h ≤ +35℃				
Humidity			When the maximum temperature is + 40 °C, the relative air humidity shall not exceed 50%. A higher relative humidity is permitted at a lower temperature, for example, the relative humidity can be up to 90% at a temperature of 20 °C. Special measures shall be taken to protect against occasional condensation caused by temperature changes.				
Altitude			The altitude of the installation site should not exceed 2,000m.				
Pollution Level			Level 3				
Installation conditions:			In addition to observing the safety precautions, the installation location should be protected from exposure to rain, snow, and steam. The product should be installed and operated in an environment free of significant shaking, shock,vibration, and conductive dust. Installation category: III. The inclination between the mounting surface and the vertical surface should not be greater than ±5°.				
Transportation and Storage Conditions			Temperature range suitable for transportation and storage: -25℃ ~+55℃				
Housing Protection			IP00				

a Contactors of the same frame size refer to contactors that have the same overall dimensions and internal structure, but differ in specific dimensions and particularly rated operating currents. For example, NC8-1450 and NC8-1700 are contactors of the same frame size (1450~2100).

2. Overall & Installation Dimensions and Weight

For the overall and installation dimensions of the contactors, please refer to Figure 1 and 6. The product model, specifications and weight are indicated on the package label.

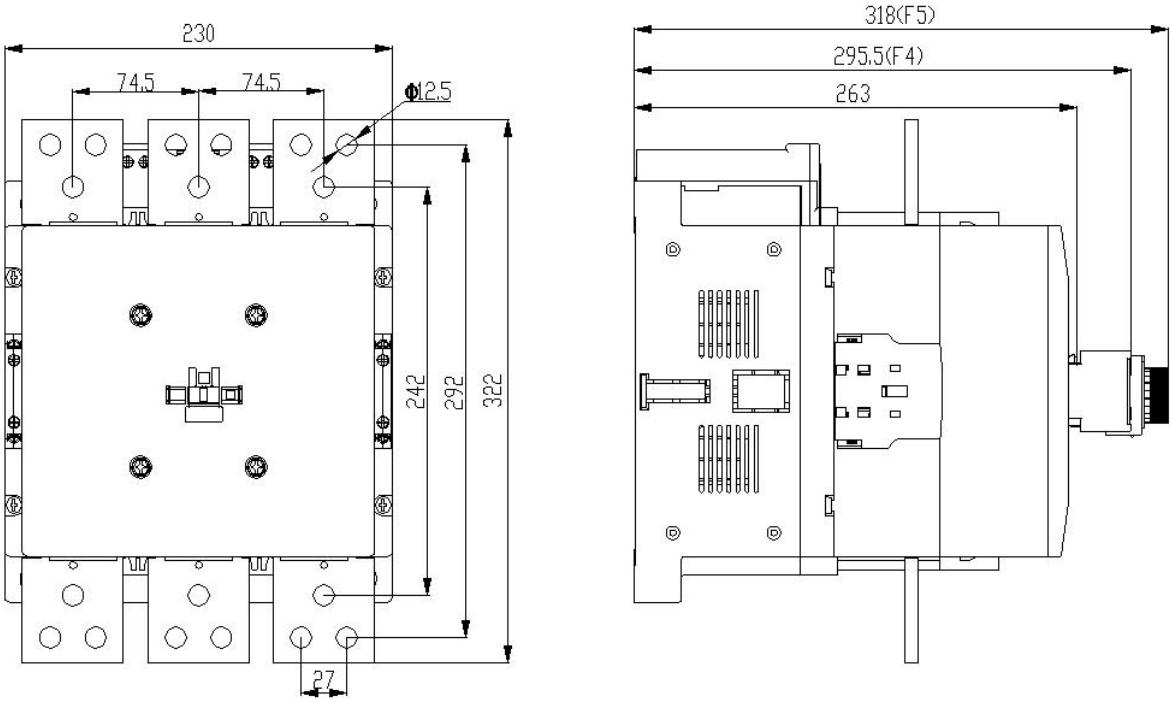

Figure 1: NC8-1260 Overall Dimensions

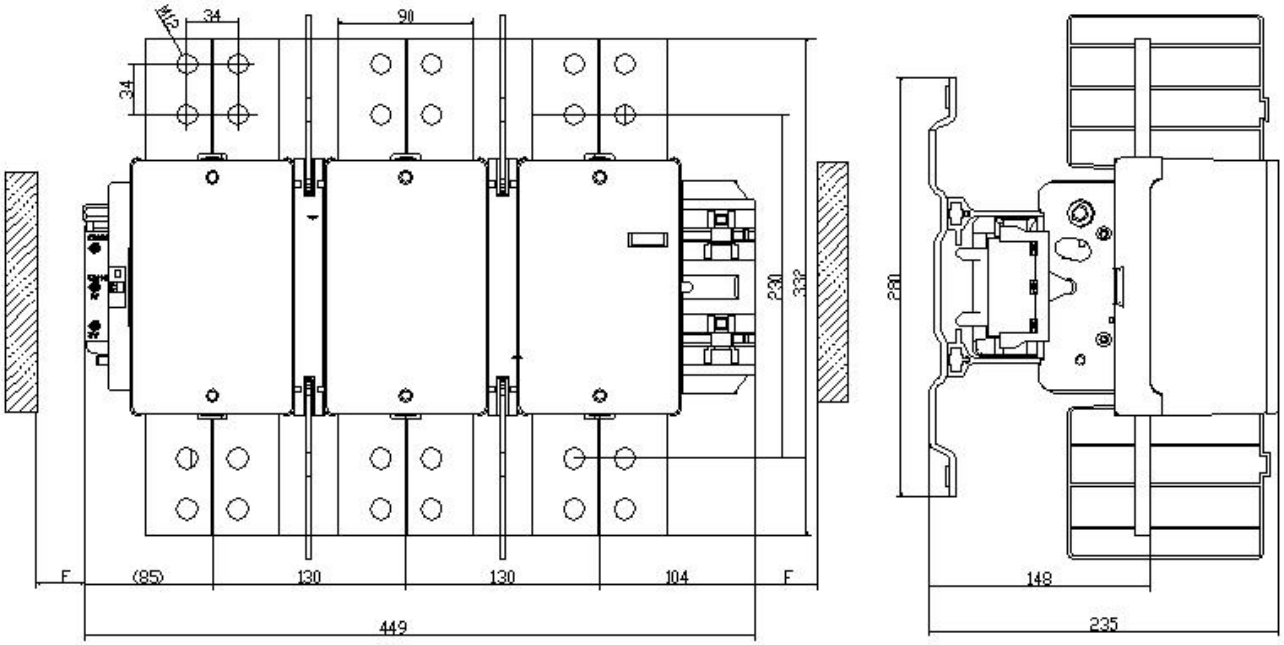

The minimum distance F required to remove the coil should be 169mm.

Figure 2: NC8-1450~2100 Overall Dimensions

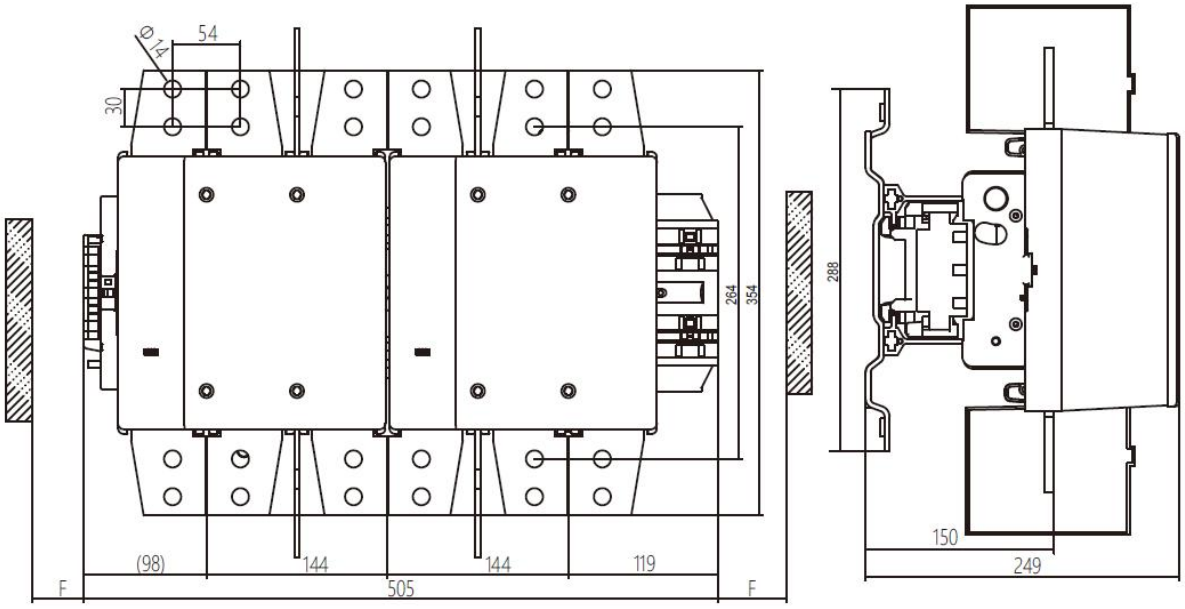

The minimum distance F required to remove the coil should be 169mm.

Figure 3: NC8-2650 Overall Dimensions

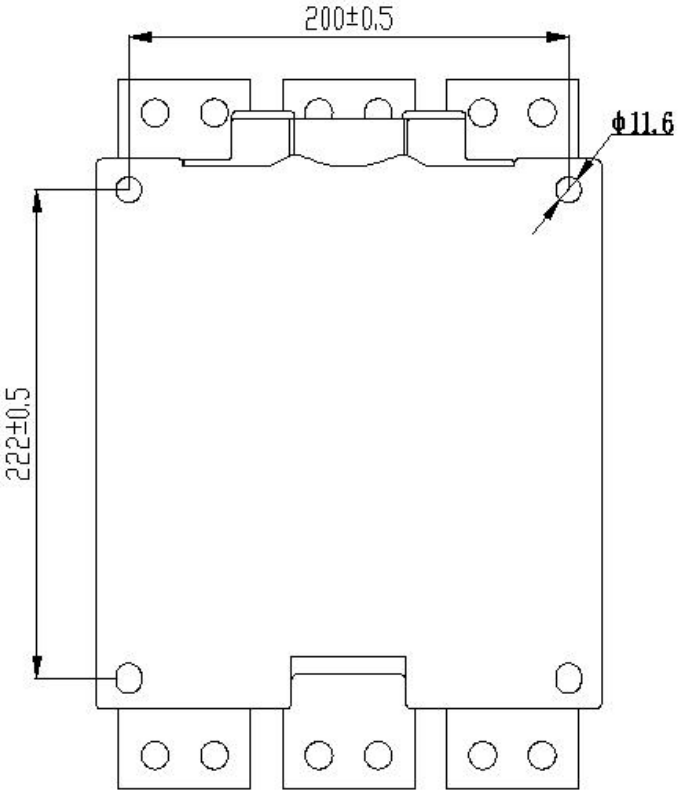

Figure 4: NC8-1260 Installation Dimensions

NC8

Drawn by
Checked by
Old Master Drawing Series No.
Master Drawing Series No.
Signature
Date

Mark	No. of Places	Changed Doc No.	Signature	Date										

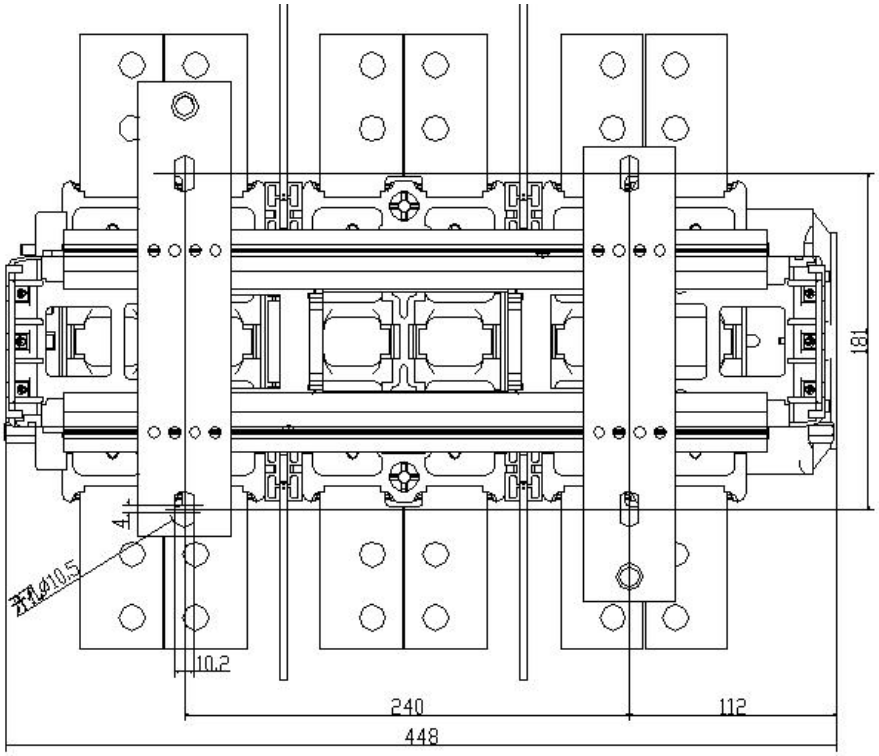

Figure 5: NC8-1450~2100 Installation Dimensions

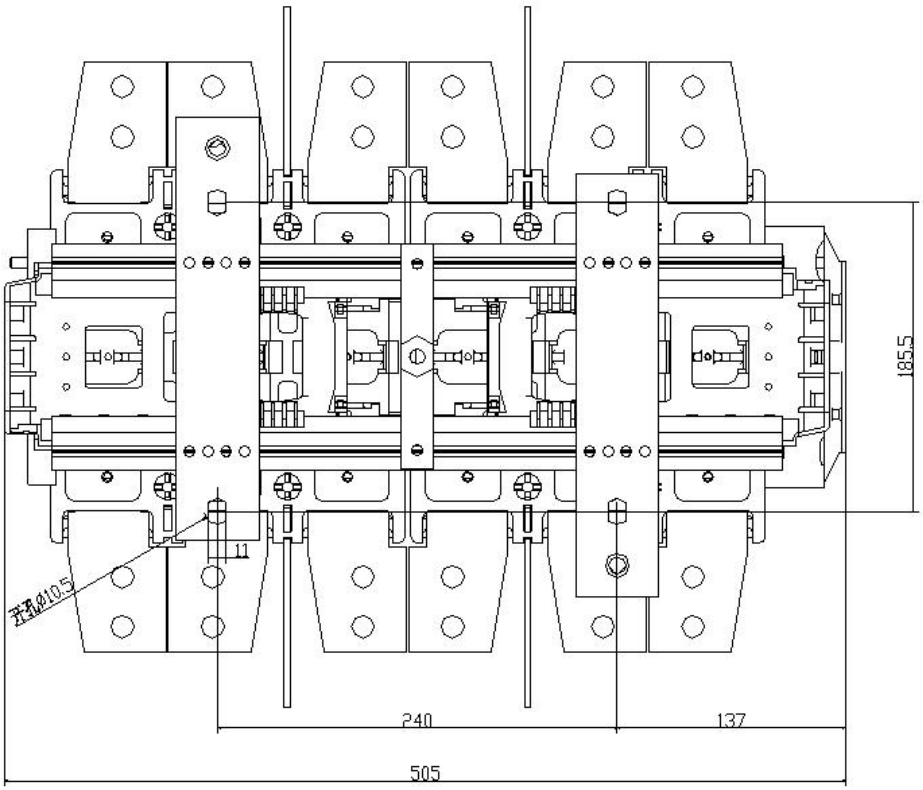

Figure 6: NC8-2650 Installation Dimensions

NC8

Drawn by	
Checked by	
Old Master Drawing Series No.	
Master Drawing Series No.	
Signature	
Date	

Mark	No. of Places	Changed Doc No.	Signature	Date										

3. Installation, Commissioning and Operation

3.1 Before installation, check whether the technical data on the coil (rated voltage, frequency, etc.) comply with the power supply specifications.

3.2 When installing a contactor, it is important to follow the specified installation conditions. The terminals A1 and A2 of the contactor coil should be facing upward to allow convenient observation.

3.3 During wiring, it is essential to pay attention to the terminal markings to ensure proper connections: 1/L1, 3/L2 and 5/L3 are the main circuit incoming terminals, while 2/T1, 4/T2 and 6/T3 are the main circuit outgoing terminals. For the (min/max) wire connection capacity of the terminals, please refer to Table 2. For the terminal connection capacity of the control circuit, please refer to Table 3.

Table 2: Copper Busbar Specifications

Product Model	NC8-1260	NC8-1450	NC8-1700	NC8-2100	NC8-2650
Female Copper Busbar Specification	100X5	100X5	100X5	100X5	100X10
Qty.	2	2	3	4	3
Wiring Torque	45N·m	58N·m	58N·m	58N·m	58N·m

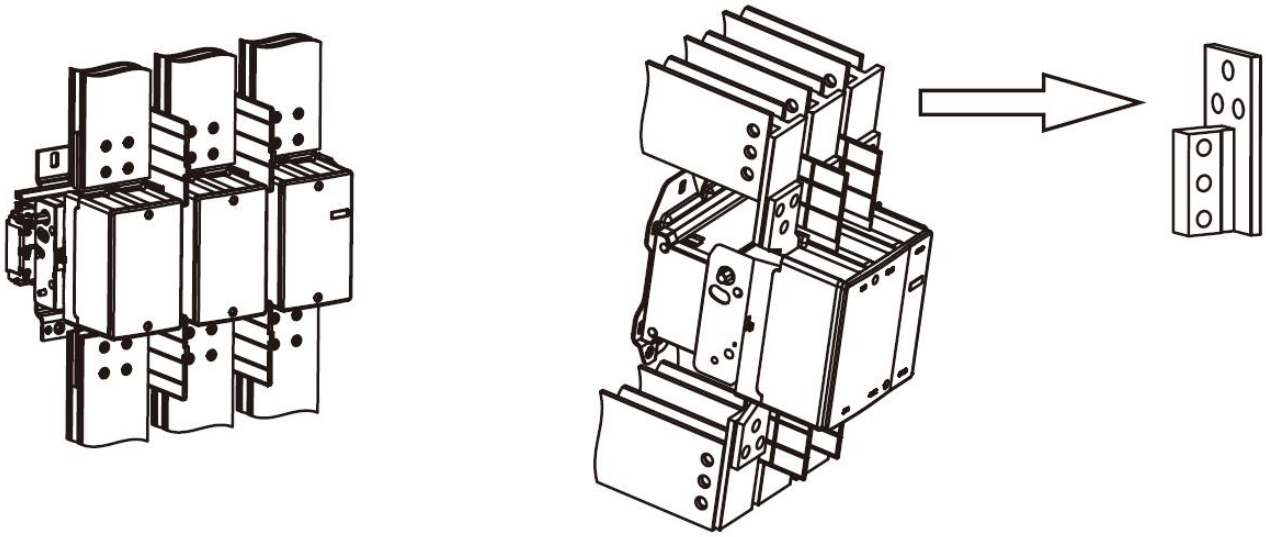

Figure 7: Wiring Diagram (NC8-1450-2650)

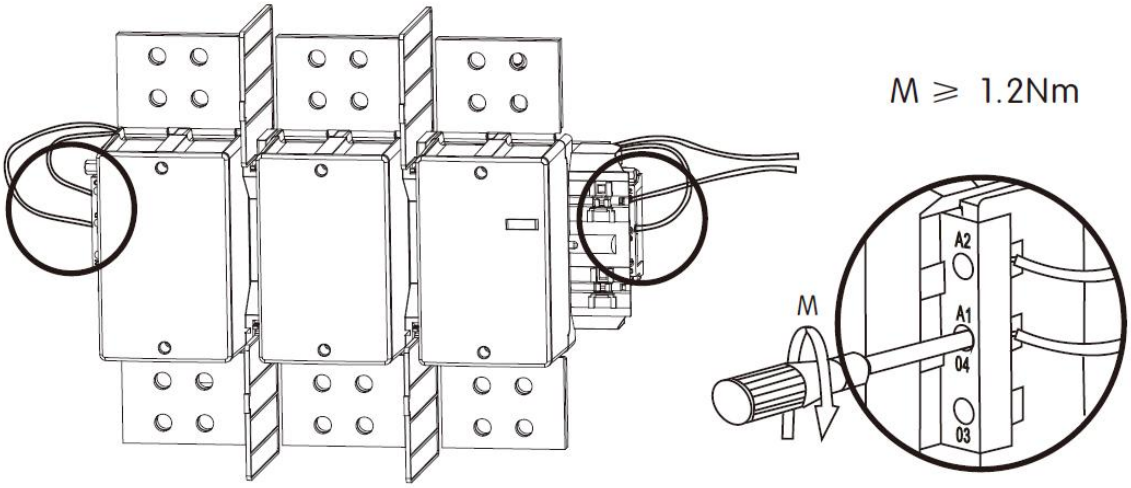

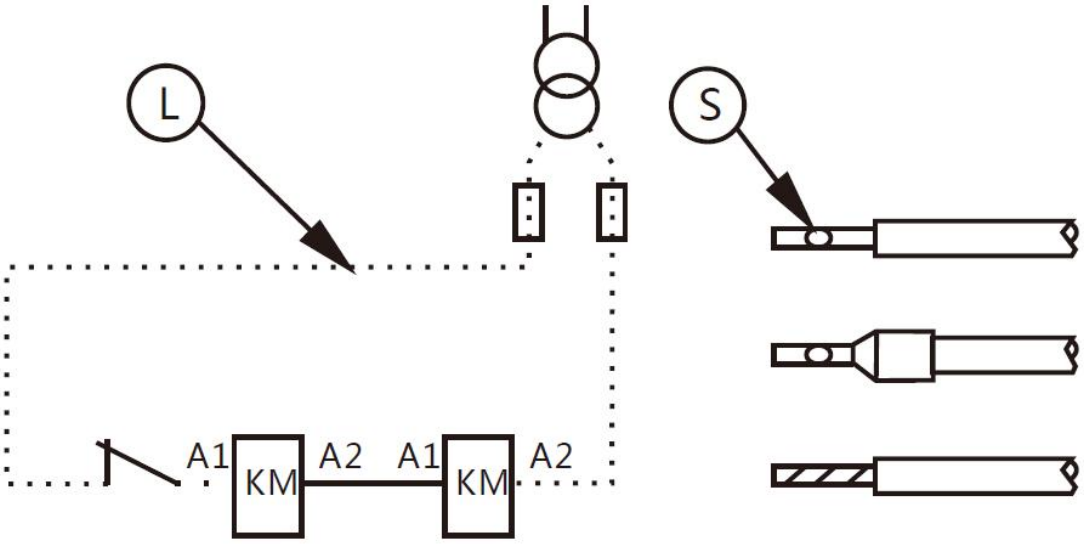

The control circuit consists of a double-winding coil that has been connected internally as shown by the solid line. The wires marked with the dotted line is to be connected by the customer.

Figure 8 Double-winding Coil Wiring Diagram (NC8-1450-2650)

Table 3: Requirements for Control Circuit Wires

U s ~ /⎓ / ≥S mm²	110V	127V	220V	380V	440V
	≤ L m				
1	/	/	15	60	60
1.5	/	/	20	90	90
2.5	15	15	40	150	150
4	20	20	60	250	250

Note: The length of the insulation sleeve to be removed from the terminal wire should be 11mm.

3.4 The wiring screws should be tightened firmly. After confirming the correctness of the wiring, it is important to energize the suction coil first to open and close the contacts several times when the main contact is not charged. The contactor should only be put into service after it is verified to function reliability according to the test result.

3.5 The arc-extinguishing cover should not to be removed until the main circuit of the contactor is de-energized. Once the arc-extinguishing cover is removed, the arc divider may be mounted or dismounted if necessary. Both the arc-extinguishing cover and the arc divider should be mounted in place during operation of the contactor.

3.6 For the assembly diagram of the accessories, please refer to Figure 9.

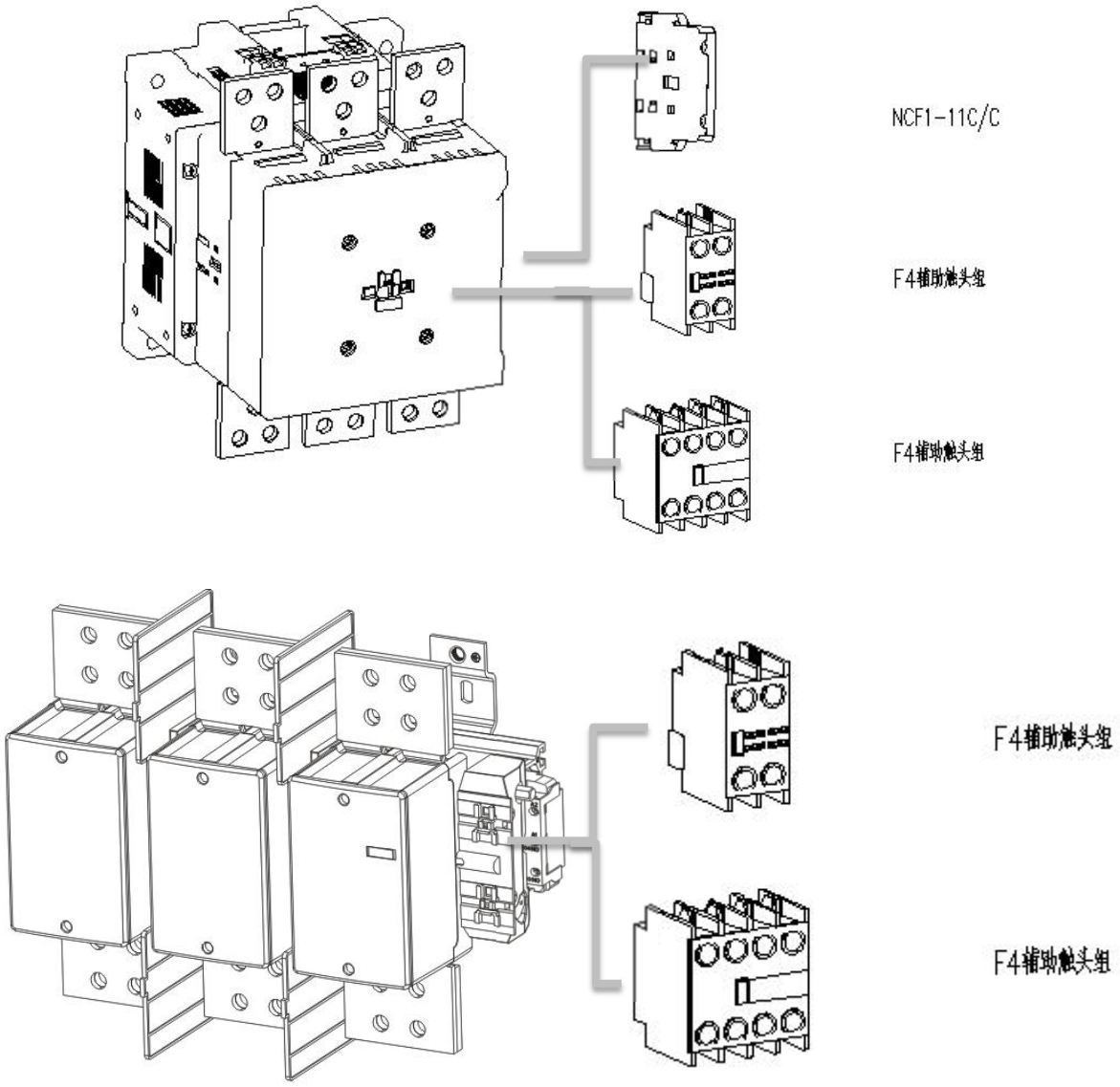

Figure 9: Assembly Diagram - Accessories

4. Precautions during Maintenance, Service, Transportation and Storage

4.1 Routine Maintenance

Take appropriate measures to remove dust, water vapor, conductive dust and corrosive substances. Then check whether the rated current is compatible with the rated operating current of the motor, and tighten the wiring screws firmly. The product may not be dismounted or repaired by individuals other than the technicians authorized by the manufacturer.

4.2 Maintenance and Service during Operation

4.2.1 If abnormal noise is detected during operation of the contactor, this may be resulted by the presence of dirt on the pole surface of the iron core. In such cases, it is recommended to clean the pole surface to address the issue.

4.2.2 The blacking of the contacts caused by arc will not significantly impact the performance of the contactor. If required, the contacts can be cleaned with a file, instead of abrasive cloth.

4.2.3 When the product is in service, it is important to check its components on a regular basis to prevent blockage in moving parts and looseness of fasteners. Such regular checks are essential to maintain safe and reliable operation of the product. If any parts are found to be damaged during inspection, they should be replaced promptly.

4.3 Maintenance Intervals

It is recommended to check and maintain the product once a month.

4.4 Out of Service and Storage for a Prolonged Period

If the product is out of service and stored for a prolonged period more than one month, it is required to carry out the checks specified in Article 3 before installing and operating the product.

5. Warranty Period, Environmental Protection and Other Regulations

5.1 Warranty Period

Provided that the product is stored and transported under normal conditions and the packaging or product remains intact, the product will be covered by a warranty period of 24 months from the date of production. However, the warranty coverage will not apply in the following situations:

1) Damage caused by improper use, storage and maintenance by the user;
2) Damage caused by unauthorized disassembly and repair carried out by an organization or person not designated by the manufacturer, or by the user;
3) Expiration of the warranty period;
4) Damage caused by force majeure.

5.2 Environmental Protection

In order to protect the environment, the product or its parts which are scrapped should be properly disposed of as industrial waste, or sent to a recycling station for classification, disassembly, recycling and reuse in accordance with relevant national regulations.

6. Instructions for Order

6.1 When ordering contactors, it is important to provide the following information:

1) The complete name and model of the contactor;
2) The rated operating voltage and frequency of the coil;
3) The quantity to be ordered;
4) Accessories (e.g., F4 auxiliary contact sets) - to be specified if needed.

6.2 Here are two examples of how to place an order for contactors: Contactor - Model: NC8-2100 (coil voltage AC 220V～230V), Quantity: 10 pcs; Accessory - Model: F4, Quantity: 5 pcs.

Operation Manual - Appendixes

Appendix 1 (Information to be contained on the cover)

For the technical information to be printed on the cover and relative requirements, please refer to the table below:

SN	Item	Specific Information	Remarks
1	Trademark	CHINT	To be designed uniformly by the Brand Management Department
2	CHINT cultural element	Lightning symbol	To be designed uniformly by the Brand Management Department
3	Product series model (or including specifications)	NC8-1260~2650	Inform users to identify the product series model and specifications
4	Product name	AC contactor	Inform users to identify the product name
5	Title	Operation Manual	According to the uniform requirements
6	Warm reminder	Thank you for purchasing our products! Please read the Operation Manual carefully before installing, using or maintaining the products.	Remind users to read the Operation Manual and keep it properly for future reference
7	Standard Compliance	GB/T 14048.4	Clearly indicate the standard(s) that products comply with. For products to be sold in China, only national standards, industry standards, group standards or manufacturers' standards will be indicated. For products to be exported overseas, international standards or standards of the export destination country will be indicated.
8	Edition no.	Edition: 8-2022	Specify the edition number of the operation man, for example "Edition: 5-2018"
9	Management system certification	According to the uniform requirements	According to the uniform requirements
10	Product QR code	/	Used for management of product-related information, or to guide users to access technical information related with products in electronic form, and identify the maintenance status of products according to their actual conditions.

Appendix 2 Safety Precautions (to be printed in a prominent place on the back page of the cover)

The safety precautions to be printed should include the following information:

1) Do not install the product in an environment containing flammable and explosive gases as well as moisture and condensation. Do not operate the product with wet hands.
2) Do not touch the conductive parts of the product when the product is operating.
3) Always de-energize the circuit before installing, maintaining and servicing the product.
4) Always prevent children from playing with the product or its packaging.
5) Install the product by maintaining sufficient spacing and safety distances around the product.
6) Do not install the product in an environment where the presence of gas media could lead to corrosion of metal parts or damage to insulation.
7) Install and operate the product by using the standard wires and connecting the power supply and loads according to the specifications.
8) To avoid dangerous accidents, make sure to install and secure the product strictly according to the instructions.
9) After unpacking the product, check it for damage and the integrity of all the items contained.
10) Installation, maintenance and service of the product should only be carried out by qualified technicians.
11) It is important to tighten the terminal screws or bolts on a regular basis and remove the dust accumulated on the product.
12) Protection should be provided to prevent foreign matters from entering the product.

Appendix 3 (Information to be contained on the quality certificate)

For the technical information to be printed on the quality certificate, please refer to the table below:

SN	Item	Specific Information	Remarks
1	Trademark	CHINT	To be designed uniformly by the Brand Management Department
2	Title	Quality Certificate	To be designed uniformly by the Brand Management Department
3	Product name	AC contactor	The product series model covered by the operation manual
4	Product series model	NC8-1260~2650	The name of the product covered in the operation manual
5	"The product has been tested according to the standard GB/T XXXX-20XX and qualified for release."	The product has been tested according to the standard GB/T 14048.4 and qualified for release.	The standard which the product covered in the operation manual complies with
6	Inspector No.	J03/KZ INSP 07	The employee number of the inspector who carried out the inspection for the finished product
7	Inspection Date	Indicated on the product or packaging	According to the uniform requirements
8	Company name	ZHEJIANG CHINT ELECTRICS CO.,LTD.	According to the uniform information specified by the company

Appendix 4 (Information to be contained on the back cover)

For the technical information to be printed on the back cover and relative requirements, please refer to the table below:

SN	Item	Specific Information	Remarks
1	Trademark	CHINT	To be designed uniformly by the Brand Management Department
2	CHINT cultural element		To be designed uniformly by the Brand Management Department
3	Warm reminder	According to technical improvements of the product, the Operation Manual is subject to revision without notice.	According to the uniform requirements
4	Area used to paste extended information	According to the uniform requirements	To be designed uniformly by the Brand Management Department
5	Company QR code	According to the uniform requirements	According to the uniform requirements
6	Recycling sign or no trash sign		
7	Producer (manufacturer) name and address	According to the uniform requirements	Include the uniform contact details specified by the company, e.g., postal code, telephone, fax, customer service hotline, website.

Appendix 5 Requirements for the Format Size, Printing Color, Binding Form and Paper Material of the Operation Manual:

For the requirements for the format size, printing color, binding form, and paper material of the operation manual, please refer to the table below:

SN	Item	Requirement	Remarks
1	Format size	144mm*105mm (92X130)	Four options available: 185mm*260mm (185X260), 148mm*210mm (130X185), 144mm*105mm (92X130), 98mm*68mm (65X92).
2	Printing color	All color printing	Three options available: color printing for cover + black & white for inner pages; all black & white printing, all color printing.
3	Binding form	Single-sheet folding	Four options available: thread-bound, bound, perfect-bound, and single-sheet folding.
4	Paper material	60g/m^2 double offset paper	Specify the paper material used for the operation manual